ORGANOMETALLICS
Organometallics, 1996, 15(10), 2534-2542, DOI:10.1021/om960028c

Terms & Conditions

Electronic Supporting Information files are available without a subscription to ACS Web Editions. The American Chemical Society holds a copyright ownership interest in any copyrightable Supporting Information. Files available from the ACS website may be downloaded for personal use only. Users are not otherwise permitted to reproduce, republish, redistribute, or sell any Supporting Information from the ACS website, either in whole or in part, in either machine-readable form or any other form without permission from the American Chemical Society. For permission to reproduce, republish and redistribute this material, requesters must process their own requests via the RightsLink permission system. Information about how to use the RightsLink permission system can be found at http://pubs.acs.org/page/copyright/permissions.html

ACS Publications
MOST TRUSTED. MOST CITED. MOST READ.

Copyright © 1996 American Chemical Society

L2542-1

$CpMo(NO)_2(CH_2Cl)$

STRUCTURE DETERMINATION SUMMARY

Empirical Formula	$C_6 H_7 N_2 O_2 Mo Cl$
Color; Habit	Green needles
Crystal Size (mm)	0.08 x 0.10 x 0.50
Crystal System	Monoclinic
Space Group	$P2_1/a$
Cell Constants	a = 7.238 (2)Å
	b = 10.589 (3)Å
	c = 12.209 (5)Å
	β = 101.73 (3)°
Volume	916.2 (6) Å^3
Z	4
Formula weight	270.5 amu
Density(calc.)	1.96 g/cm^3
Absorption Coefficient	1.65 mm^{-1}
F(000)	528 e
Diffractometer Used	Nicolet R3m/v
Radiation	MoKα (λ = 0.71073 Å)
Temperature (K)	294
Monochromator	Highly oriented graphite crystal
2θ Range, °	3 - 50
Scan Type	2θ-θ
Scan Speed	Variable 3.00 to 15.00°/min in ω
Scan Range (ω)	1.20° plus Kα separation
Background Measurement	Stationary crystal and stationary counter at beginning and end of scan, each for 25.0% of total scan time
Standard Reflections	2 measured every 100 reflections
Index Ranges	$0 \le h \le 8$; $0 \le k \le 12$; $-14 \le l \le 14$
Reflections Collected	1858
Independent Reflections	1631 (R_{int} = 5.1 %)
Observed Reflections	1240 ($F > 3\ \sigma(F)$)
Absorption Correction	Semi-empirical, psi scans
Min./Max. Transmission	0.461, 0.713
Solution and Refinement	Siemens SHELXTLPLUS (VMS)
Solution Method	Direct Methods
Refinement Method	Full-Matrix Least-Squares
Quantity Minimized	$\Sigma_w(F^o-F_c)^2$
Hydrogen Atoms	Riding model, fixed isotropic U
Weighting Scheme	$w^{-1} = \sigma^2(F) + 0.0017\ F^2$
Number of Parameters	109
Final R indices	R = 5.26%, wR = 6.32%
Goodness-of-Fit	1.14
Largest and Mean Δ/σ	0.001, 0.000
Data-to-Parameter Ratio	11.4 : 1
Largest Difference Peak	1.20 e$^-$/Å^3

L2542-2 2

$CpMo(NO)_2(CH_2Cl)$

Table 1. Atomic coordinates ($x10^4$) and equivalent isotropic displacement coefficients ($Å^2 \times 10^3$)

	x	y	z	U_{eq}
Mo	682(1)	254(1)	2116(1)	42(1)
Cl	703(4)	1856(3)	4460(2)	71(1)
C(6)	-742(13)	878(10)	3444(7)	59(3)
N(1)	716(9)	1772(7)	1415(6)	51(3)
O(1)	868(11)	2701(7)	926(6)	77(3)
N(2)	-1508(11)	-247(7)	1189(6)	52(2)
O(2)	-2824(10)	-652(7)	565(5)	71(3)
C(1)	2668(22)	-1388(14)	1831(11)	97(6)
C(2)	1945(15)	-1714(10)	2789(14)	91(6)
C(3)	2674(14)	-858(12)	3578(8)	70(4)
C(4)	3773(14)	-12(9)	3169(12)	76(5)
C(5)	3766(17)	-350(14)	2079(11)	82(5)

$U_{eq} = \frac{1}{3} \Sigma_i \Sigma_j U_{ij}\ a_i^* a_j^*\ a_i\ a_j$

Table 2. Bond lengths (Å)

Mo-C(6)	2.192	(10)
Mo-N(1)	1.824	(7)
Mo-N(2)	1.830	(7)
Mo-C(1)	2.326	(16)
Mo-C(2)	2.354	(11)
Mo-C(3)	2.366	(10)
Mo-C(4)	2.359	(10)
Mo-C(5)	2.331	(13)
Cl-C(6)	1.783	(9)
N(1)-O(1)	1.167	(10)
N(2)-O(2)	1.173	(9)
C(1)-C(2)	1.418	(23)
C(1)-C(5)	1.355	(20)
C(2)-C(3)	1.350	(17)
C(3)-C(4)	1.358	(17)
C(4)-C(5)	1.377	(20)

L2542-3 3

$CpMo(NO)_2(CH_2Cl)$

Table 3. Bond angles (°)

C(6)-Mo-N(1)	97.7(4)
C(6)-Mo-N(2)	93.8(3)
N(1)-Mo-N(2)	93.3(3)
C(6)-Mo-C(1)	137.2(4)
N(1)-Mo-C(1)	121.4(4)
N(2)-Mo-C(1)	100.1(4)
C(6)-Mo-C(2)	102.5(5)
N(1)-Mo-C(2)	154.5(4)
N(2)-Mo-C(2)	100.7(4)
C(1)-Mo-C(2)	35.3(5)
C(6)-Mo-C(3)	84.1(4)
N(1)-Mo-C(3)	136.7(3)
N(2)-Mo-C(3)	129.9(4)
C(1)-Mo-C(3)	56.1(4)
C(2)-Mo-C(3)	33.2(5)
C(6)-Mo-C(4)	99.7(4)
N(1)-Mo-C(4)	105.0(3)
N(2)-Mo-C(4)	155.4(3)
C(1)-Mo-C(4)	56.4(4)
C(2)-Mo-C(4)	56.4(4)
C(3)-Mo-C(4)	33.4(4)
C(6)-Mo-C(5)	133.9(4)
N(1)-Mo-C(5)	97.4(4)
N(2)-Mo-C(5)	128.4(4)
C(1)-Mo-C(5)	33.8(5)
C(2)-Mo-C(5)	57.3(5)
C(3)-Mo-C(5)	55.9(4)
C(4)-Mo-C(5)	34.1(5)
Mo-C(6)-Cl	113.1(5)
Mo-N(1)-O(1)	173.9(7)
Mo-N(2)-O(2)	174.2(7)
Mo-C(1)-C(2)	73.5(8)
Mo-C(1)-C(5)	73.3(9)
C(2)-C(1)-C(5)	108.1(12)
Mo-C(2)-C(1)	71.3(8)
Mo-C(2)-C(3)	73.9(7)
C(1)-C(2)-C(3)	105.6(11)
Mo-C(3)-C(2)	72.9(6)
Mo-C(3)-C(4)	73.0(6)
C(2)-C(3)-C(4)	110.7(11)
Mo-C(4)-C(3)	73.6(6)
Mo-C(4)-C(5)	71.8(7)
C(3)-C(4)-C(5)	107.3(10)
Mo-C(5)-C(1)	72.9(9)
Mo-C(5)-C(4)	74.1(7)
C(1)-C(5)-C(4)	108.3(12)

L2542-4

4

$CpMo(NO)_2(CH_2Cl)$

Table 4. Anisotropic displacement coefficients ($Å^2$ x10^3)

	U_{11}	U_{22}	U_{33}	U_{12}	U_{13}	U_{23}
Mo	37(1)	45(1)	45(1)	4(1)	8(1)	6(1)
Cl	76(2)	72(2)	65(1)	-7(1)	14(1)	-11(1)
C(6)	51(5)	79(7)	49(5)	2(5)	17(4)	4(5)
N(1)	43(4)	52(5)	56(4)	5(3)	6(3)	4(4)
O(1)	90(5)	49(4)	91(5)	2(4)	15(4)	25(4)
N(2)	51(4)	59(4)	45(4)	7(4)	10(3)	1(4)
O(2)	64(4)	88(5)	57(4)	-13(4)	-1(3)	-10(4)
C(1)	112(10)	88(10)	74(8)	60(9)	-18(7)	-27(7)
C(2)	56(7)	45(7)	158(13)	-2(5)	-9(8)	15(7)
C(3)	58(6)	100(8)	56(6)	35(6)	17(5)	26(6)
C(4)	40(5)	57(8)	119(10)	2(4)	-14(6)	-3(6)
C(5)	59(6)	105(10)	92(9)	47(7)	41(6)	33(8)

The anisotropic displacement exponent takes the form:
$-2\pi^2(h^2a^{*2}U_{11} + \ldots + 2hka^*b^*U_{12})$

Table 5. H-Atom coordinates (x10^4) and isotropic displacement coefficients ($Å^2$ x10^3)

	x	y	z	U
H(6A)	-1122	150	3811	80
H(6B)	-1861	1337	3113	80
H(1C)	2545	-1883	1162	80
H(2A)	1252	-2462	2891	80
H(3A)	2514	-881	4339	80
H(4A)	4541	631	3590	80
H(5A)	4546	14	1613	80

©1996 American Chemical Society Organometallics V15 Page 2534 Elcesser Supplemental Page 5

L2542-5

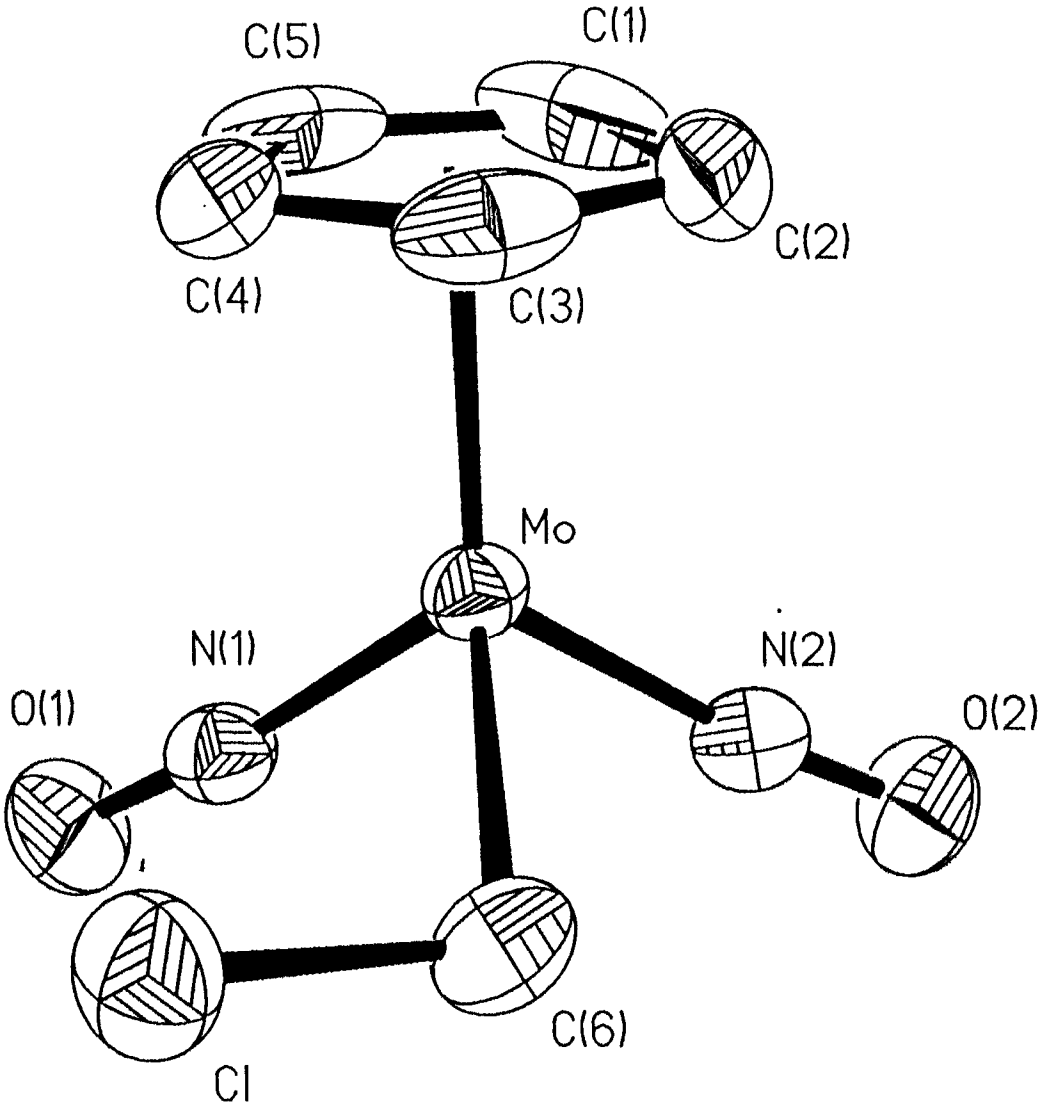

L2542-6 6

$CpMo(NO)_2(CH_2Br)$

STRUCTURE DETERMINATION SUMMARY

Empirical Formula	$C_6 H_7 N_2 O_2 Br Mo$
Color; Habit	Green prisms
Crystal Size (mm)	0.04 x 0.10 x 0.18
Crystal System	Triclinic
Space Group	*P* 1bar
Cell Constants	a = 7.754 (2)Å
	b = 8.259 (2)Å
	c = 8.663(3)Å
	α = 96.81 (2)°
	β = 116.04 (2)°
	γ = 104.85 (2)°
Volume	464.4 (2) Å^3
Z	2
Formula weight	315.0 amu
Density(calc.)	2.25 g/cm^3
Absorption Coefficient	5.60 mm^{-1}
F(000)	300 e
Diffractometer Used	Nicloet R3m/v
Radiation	MoKα (λ = 0.71073 Å)
Temperature (K)	294
Monochromator	Highly oriented graphite crystal
2θ Range, °	3 - 48
Scan Type	2θ-θ
Scan Speed	Variable 3.00 to 15.00°/min in ω
Scan Range (ω)	1.20° plus Kα separation
Background Measurement	Stationary crystal and stationary counter at beginning and end of scan, each for 25.0% of total scan time
Standard Reflections	2 measured every 100 reflections
Index Ranges	$0 \le h \le 8$; $-9 \le k \le 9$; $-9 \le l \le 9$
Reflections Collected	1455
Independent Reflections	1455
Observed Reflections	1140 (F > 3 σ(F))
Absorption Correction	Semi-empirical, psi scans
Min./Max. Transmission	0.557, 0.805
Solution and Refinement	Siemens SHELXTLPLUS (VMS)
Solution Method	Direct Methods
Refinement Method	Full-Matrix Least-Squares
Quantity Minimized	$\Sigma_w(F^o-F_o)^2$
Hydrogen Atoms	Riding model, fixed isotropic U
Weighting Scheme	$w^{-1} = \sigma^2(F) + 0.0023\ F^2$
Number of Parameters	109
Final R indices	R = 4.65%, wR = 5.66%
Goodness-of-Fit	0.92
Largest and Mean Δ/σ	0.001, 0.000
Data-to-Parameter Ratio	10.5 : 1
Largest Difference Peak	1.21 e$^-$/Å^3

L2542-7 7

$CpMo(NO)_2(CH_2Br)$

Table 1. Atomic coordinates ($x10^4$) and equivalent isotropic displacement coefficients ($Å^2 \times 10^3$)

	x	y	z	U_{eq}
Mo	313(1)	3432(1)	2278(1)	32(1)
Br	3878(2)	1784(1)	4965(2)	58(1)
O(1)	3222(12)	4019(10)	807(10)	57(4)
O(2)	569(13)	7141(9)	2945(10)	60(4)
N(1)	2150(11)	3816(9)	1460(9)	37(3)
N(2)	590(11)	5721(10)	2759(10)	38(4)
C(6)	2596(14)	3534(13)	4974(12)	45(5)
C(1)	-1758(17)	1004(15)	2651(16)	60(6)
C(2)	-1519(17)	438(13)	1212(17)	58(6)
C(3)	-2468(17)	1195(17)	-103(14)	66(6)
C(4)	-3279(16)	2259(15)	554(17)	65(6)
C(5)	-2789(18)	2134(16)	2249(18)	66(7)

$U_{eq} = \frac{1}{3} \Sigma_i \Sigma_j U_{ij}\ a_i^* a_j^*\ a_i\ a_j$

Table 2. Bond lengths (Å)

Mo-N(1)	1.828	(10)
Mo-N(2)	1.823	(8)
Mo-C(6)	2.200	(9)
Mo-C(1)	2.380	(13)
Mo-C(2)	2.343	(9)
Mo-C(3)	2.338	(9)
Mo-C(4)	2.356	(10)
Mo-C(5)	2.357	(15)
Br-C(6)	1.953	(12)
O(1)-N(1)	1.185	(14)
O(2)-N(2)	1.170	(12)
C(1)-C(2)	1.384	(22)
C(1)-C(5)	1.359	(20)
C(2)-C(3)	1.377	(18)
C(3)-C(4)	1.403	(21)
C(4)-C(5)	1.370	(21)

L2542-8 8

$CpMo(NO)_2(CH_2Br)$

Table 3. Bond angles (°)

N(1)-Mo-N(2)	92.5(4)
N(1)-Mo-C(6)	93.9(4)
N(2)-Mo-C(6)	96.0(4)
N(1)-Mo-C(1)	136.9(4)
N(2)-Mo-C(1)	130.6(5)
C(6)-Mo-C(1)	83.1(4)
N(1)-Mo-C(2)	105.9(5)
N(2)-Mo-C(2)	154.8(4)
C(6)-Mo-C(2)	99.6(4)
C(1)-Mo-C(2)	34.1(5)
N(1)-Mo-C(3)	100.9(4)
N(2)-Mo-C(3)	126.4(4)
C(6)-Mo-C(3)	133.8(4)
C(1)-Mo-C(3)	56.6(4)
C(2)-Mo-C(3)	34.2(4)
N(1)-Mo-C(4)	127.1(4)
N(2)-Mo-C(4)	98.3(4)
C(6)-Mo-C(4)	135.6(5)
C(1)-Mo-C(4)	56.1(4)
C(2)-Mo-C(4)	57.0(4)
C(3)-Mo-C(4)	34.8(5)
N(1)-Mo-C(5)	157.7(4)
N(2)-Mo-C(5)	101.1(5)
C(6)-Mo-C(5)	102.1(5)
C(1)-Mo-C(5)	33.3(5)
C(2)-Mo-C(5)	56.3(5)
C(3)-Mo-C(5)	56.8(5)
C(4)-Mo-C(5)	33.8(5)
Mo-N(1)-O(1)	175.2(6)
Mo-N(2)-O(2)	173.4(6)
Mo-C(6)-Br	112.5(5)
Mo-C(1)-C(2)	71.5(7)
Mo-C(1)-C(5)	72.4(8)
C(2)-C(1)-C(5)	108.0(12)
Mo-C(2)-C(1)	74.4(6)
Mo-C(2)-C(3)	72.7(6)
C(1)-C(2)-C(3)	108.1(12)
Mo-C(3)-C(2)	73.1(5)
Mo-C(3)-C(4)	73.3(6)
C(2)-C(3)-C(4)	107.3(12)
Mo-C(4)-C(3)	71.9(6)
Mo-C(4)-C(5)	73.1(7)
C(3)-C(4)-C(5)	107.2(12)
Mo-C(5)-C(1)	74.3(9)
Mo-C(5)-C(4)	73.1(8)
C(1)-C(5)-C(4)	109.4(14)

L2542-9 9

$CpMo(NO)_2(CH_2Br)$

Table 4. Anisotropic displacement coefficients ($Å^2$ x10^3)

	U_{11}	U_{22}	U_{33}	U_{12}	U_{13}	U_{23}
Mo	26(1)	25(1)	36(1)	3(1)	12(1)	3(1)
Br	49(1)	50(1)	67(1)	18(1)	19(1)	22(1)
O(1)	63(5)	60(5)	67(5)	23(4)	47(4)	14(4)
O(2)	76(5)	34(4)	65(5)	21(4)	30(4)	6(4)
N(1)	33(4)	30(4)	39(4)	5(3)	14(4)	6(3)
N(2)	32(4)	31(5)	43(4)	3(3)	16(4)	7(3)
C(6)	33(5)	51(6)	40(5)	8(5)	15(4)	-1(4)
C(1)	49(7)	54(7)	61(7)	-8(6)	26(6)	25(6)
C(2)	46(7)	26(5)	88(9)	5(5)	28(6)	2(5)
C(3)	40(6)	70(8)	39(6)	-28(6)	11(5)	-21(6)
C(4)	27(6)	56(7)	78(8)	0(5)	3(5)	23(6)
C(5)	50(7)	56(7)	83(9)	-4(6)	42(7)	-6(7)

The anisotropic displacement exponent takes the form:
$-2\pi^2(h^2a^{*2}U_{11} + \ldots + 2hka^*b^*U_{12})$

Table 5. H-Atom coordinates (x10^4) and isotropic displacement coefficients ($Å^2$ x10^3)

	x	y	z	U
H(6A)	1947	3361	5693	80
H(6B)	3635	4667	5505	80
H(1C)	-1283	656	3740	80
H(2A)	-815	-345	1142	80
H(3A)	-2560	1024	-1256	80
H(4A)	-4033	2947	-67	80
H(5A)	-3119	2751	3031	80

©1996 American Chemical Society Organometallics V15 Page 2534 Elcesser Supplemental Page 10

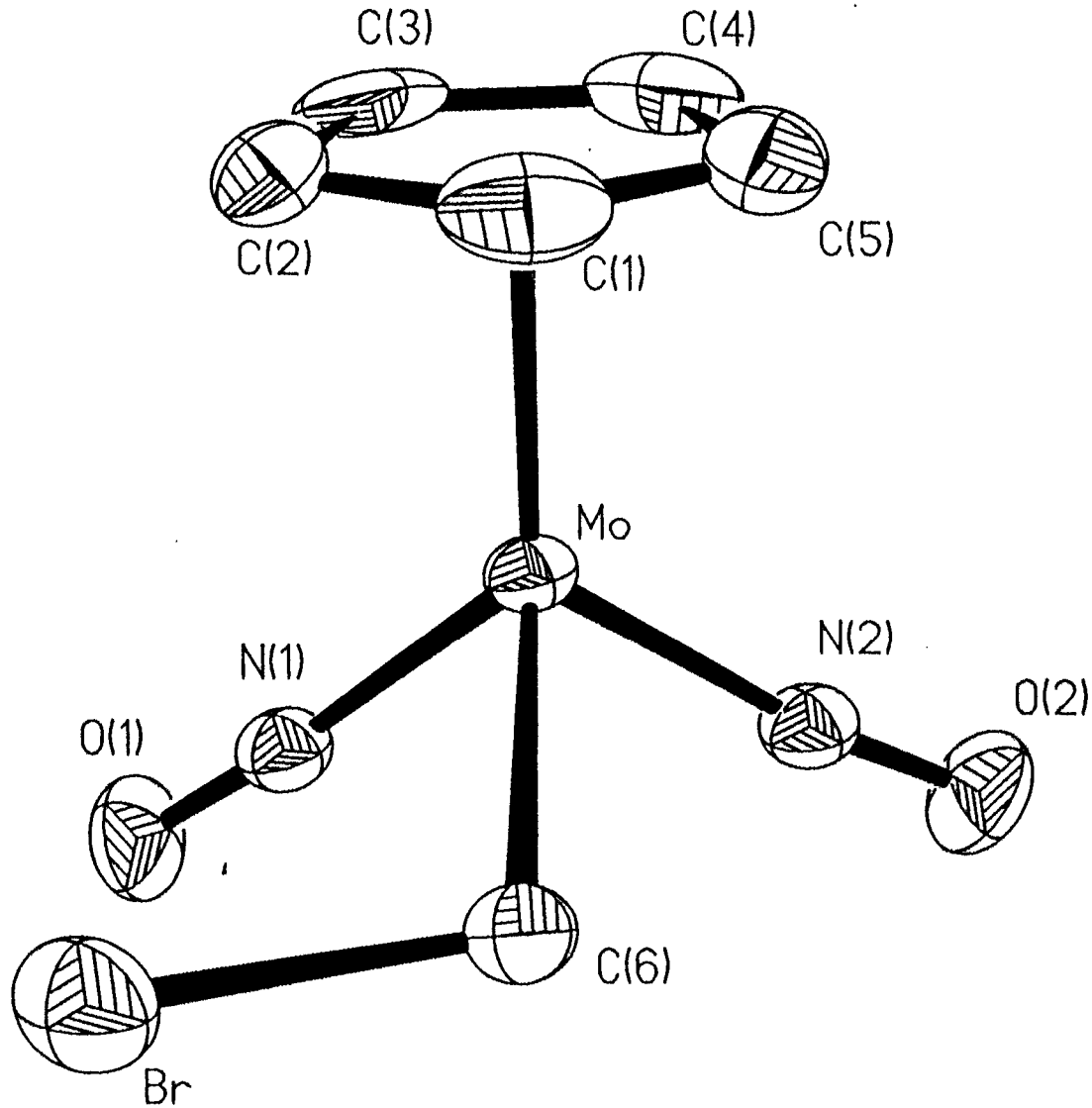

L2542-11 11

$CpMo(NO)_2(CH_2I)$

STRUCTURE DETERMINATION SUMMARY

Empirical Formula	$C_6 H_7 N_2 O_2 Mo I$
Color; Habit	Green plates
Crystal Size (mm)	0.12 x 0.35 x 0.40
Crystal System	Triclinic
Space Group	*P* 1bar
Cell Constants	a = 7.822 (3)Å
	b = 8.406 (4)Å
	c = 8.964 (5)Å
	α = 98.31 (4)°
	β = 115.50 (3)°
	γ = 104.37 (3)°
Volume	493.6 (4) Å^3
Z	2
Formula weight	362.0 amu
Density(calc.)	2.435 g/cm^3
Absorption Coefficient	4.36 mm^{-1}
F(000)	336 e
Diffractometer Used	Nicolet R3m/v
Radiation	MoKα (λ = 0.71073 Å)
Temperature (K)	294
Monochromator	Highly oriented graphite crystal
2θ Range, °	3 - 48
Scan Type	2θ-θ
Scan Speed	Variable 3.00 to 15.00°/min in ω
Scan Range (ω)	1.20° plus Kα separation
Background Measurement	Stationary crystal and stationary counter at beginning and end of scan, each for 25.0% of total scan time
Standard Reflections	2 measured every 100 reflections
Index Ranges	$0 \le h \le 8$; $-9 \le k \le 9$; $-10 \le l \le 8$
Reflections Collected	1553
Independent Reflections	1553
Observed Reflections	1290 ($F > 6\,\sigma(F)$)
Absorption Correction	Semi empirical, psi scans
Min./Max. Transmission	0.87, 1.00
Solution and Refinement	Siemens SHELXTLPLUS (VMS)
Solution Method	Direct Methods
Refinement Method	Full-Matrix Least-Squares
Quantity Minimized	$\Sigma_w(F^o-F_c)^2$
Hydrogen Atoms	Riding model, fixed isotropic U
Weighting Scheme	$w^{-1} = \sigma^2(F) + 0.0063\,F^2$
Number of Parameters	109
Final R indices	R = 5.85%, wR = 7.79%
Goodness-of-Fit	0.96
Largest and Mean Δ/σ	0.001, 0.000
Data-to-Parameter Ratio	11.8 : 1
Largest Difference Peak	1.58 e$^-$/Å^3

L2542-12(2

$CpMo(NO)_2(CH_2I)$

Table 1. Atomic coordinates ($x10^4$) and equivalent isotropic displacement coefficients ($Å^2 \times 10^3$)

	x	y	z	U_{eq}
Mo	230(1)	3476(1)	2222(1)	35(1)
I	3834(1)	1765(1)	4980(1)	57(1)
N(1)	2091(11)	3864(9)	1487(9)	41(3)
O(1)	3200(12)	4019(10)	906(11)	67(4)
N(2)	446(12)	5719(9)	2661(10)	43(4)
O(2)	422(12)	7107(9)	2841(10)	66(4)
C(6)	2417(15)	3672(13)	4867(12)	49(4)
C(1)	-2861(16)	2192(16)	2197(18)	73(7)
C(2)	-1800(18)	1090(15)	2534(16)	69(6)
C(3)	-1568(18)	483(14)	1123(19)	71(6)
C(4)	-2513(19)	1235(16)	-116(15)	78(6)
C(5)	-3341(15)	2295(15)	532(20)	75(7)

$U_{eq} = \frac{1}{3} \Sigma_i \Sigma_j U_{ij}\ a_i^* a_j^*\ a_i\ a_j$

Table 2. Bond lengths (Å)

Mo-N(1)	1.821 (10)
Mo-N(2)	1.819 (8)
Mo-C(6)	2.197 (9)
Mo-C(1)	2.379 (14)
Mo-C(2)	2.363 (13)
Mo-C(3)	2.368 (10)
Mo-C(4)	2.351 (9)
Mo-C(5)	2.372 (10)
I-C(6)	2.154 (12)
N(1)-O(1)	1.180 (15)
N(2)-O(2)	1.161 (11)
C(1)-C(2)	1.373 (20)
C(1)-C(5)	1.396 (24)
C(2)-C(3)	1.396 (24)
C(3)-C(4)	1.381 (20)
C(4)-C(5)	1.418 (22)

L2542-13 3

$CpMo(NO)_2(CH_2I)$

Table 3. Bond angles (°)

N(1)-Mo-N(2)	92.2(4)
N(1)-Mo-C(6)	94.5(4)
N(2)-Mo-C(6)	95.6(4)
N(1)-Mo-C(1)	159.1(4)
N(2)-Mo-C(1)	100.6(5)
C(6)-Mo-C(1)	100.5(5)
N(1)-Mo-C(2)	136.6(4)
N(2)-Mo-C(2)	131.1(5)
C(6)-Mo-C(2)	83.1(4)
C(1)-Mo-C(2)	33.7(5)
N(1)-Mo-C(3)	105.8(5)
N(2)-Mo-C(3)	154.3(4)
C(6)-Mo-C(3)	100.9(4)
C(1)-Mo-C(3)	57.2(5)
C(2)-Mo-C(3)	34.3(6)
N(1)-Mo-C(4)	101.8(4)
N(2)-Mo-C(4)	125.2(4)
C(6)-Mo-C(4)	134.7(4)
C(1)-Mo-C(4)	57.2(5)
C(2)-Mo-C(4)	56.3(5)
C(3)-Mo-C(4)	34.0(5)
N(1)-Mo-C(5)	128.2(5)
N(2)-Mo-C(5)	97.2(4)
C(6)-Mo-C(5)	134.5(5)
C(1)-Mo-C(5)	34.2(6)
C(2)-Mo-C(5)	56.2(5)
C(3)-Mo-C(5)	57.3(4)
C(4)-Mo-C(5)	34.9(5)
Mo-N(1)-O(1)	175.2(5)
Mo-N(2)-O(2)	174.5(6)
Mo-C(6)-I	113.0(5)
Mo-C(1)-C(2)	72.5(8)
Mo-C(1)-C(5)	72.6(8)
C(2)-C(1)-C(5)	107.2(14)
Mo-C(2)-C(1)	73.8(8)
Mo-C(2)-C(3)	73.0(8)
C(1)-C(2)-C(3)	110.4(13)
Mo-C(3)-C(2)	72.6(7)
Mo-C(3)-C(4)	72.3(6)
C(2)-C(3)-C(4)	106.4(13)
Mo-C(4)-C(3)	73.7(6)
Mo-C(4)-C(5)	73.4(6)
C(3)-C(4)-C(5)	108.6(14)
Mo-C(5)-C(1)	73.2(6)
Mo-C(5)-C(4)	71.7(6)
C(1)-C(5)-C(4)	107.3(12)

L2542-14 14

$CpMo(NO)_2(CH_2I)$

Table 4. Anisotropic displacement coefficients ($Å^2$ x10^3)

	U_{11}	U_{22}	U_{33}	U_{12}	U_{13}	U_{23}
Mo	32(1)	32(1)	39(1)	8(1)	18(1)	3(1)
I	54(1)	49(1)	63(1)	21(1)	22(1)	18(1)
N(1)	41(4)	35(4)	46(4)	12(3)	23(4)	8(3)
O(1)	65(5)	75(5)	86(5)	25(4)	58(4)	24(4)
N(2)	50(4)	32(4)	53(4)	16(3)	30(4)	11(3)
O(2)	87(6)	38(4)	76(5)	28(4)	41(4)	8(3)
C(6)	54(6)	46(5)	40(5)	19(5)	20(4)	1(4)
C(1)	44(6)	67(8)	95(9)	1(6)	41(6)	-8(7)
C(2)	61(7)	55(7)	68(7)	-5(6)	26(6)	20(6)
C(3)	54(7)	39(6)	105(10)	12(5)	34(7)	4(6)
C(4)	68(7)	72(8)	50(6)	-23(6)	29(6)	-22(6)
C(5)	29(5)	52(7)	111(11)	11(5)	11(6)	16(7)

The anisotropic displacement exponent takes the form:
$-2\pi^2(h^2a^{*2}U_{11} + \ldots + 2hka^*b^*U_{12})$

Table 5. H-Atom coordinates (x10^4) and isotropic displacement coefficients ($Å^2$ x10^3)

	x	y	z	U
H(6A)	1756	3579	5554	80
H(6B)	3449	4785	5353	80
H(1A)	-3317	2702	2917	80
H(2A)	-1403	685	3538	80
H(3A)	-994	-376	986	80
H(4A)	-2713	954	-1270	80
H(5A)	-4201	2869	-104	80

©1996 American Chemical Society Organometallics V15 Page 2534 Elcesser Supplemental Page 15

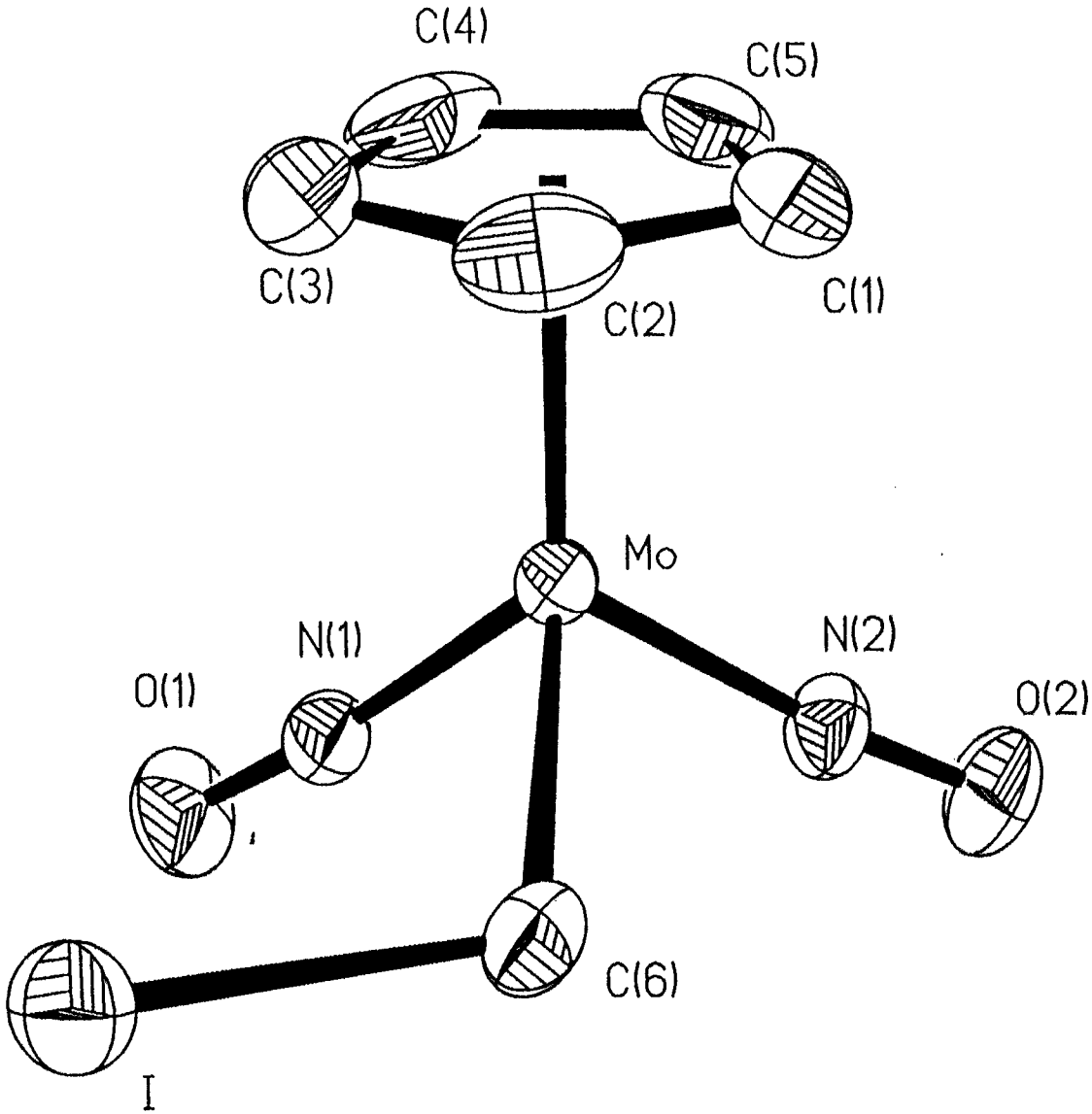

L2542-15

L2542-16 16

$Cp^*Mo(NO)_2(CH_2Cl)$

STRUCTURE DETERMINATION SUMMARY

Empirical Formula	$C_{11}H_{17}N_2O_2MoCl$
Color; Habit	Yellow-green prisms
Crystal Size (mm)	0.10 x 0.20 x 0.40
Crystal System	Triclinic
Space Group	*P* 1bar
Cell Constants	a = 6.951 (2)Å
	b = 7.985 (3)Å
	c = 14.291 (6)Å
	α = 76.92 (3)°
	β = 84.28 (3)°
	γ = 67.55 (2)°
Volume	714.0 (5) Å^3
Z	2
Formula weight	340.7 amu
Density(calc.)	1.59 g/cm^3
Absorption Coefficient	1.08 mm^{-1}
F(000)	344 e
Diffractometer Used	Nicolet R3m/v
Radiation	MoKα (λ = 0.71073 Å)
Temperature (K)	294
Monochromator	Highly oriented graphite crystal
2θ Range, °	3 - 50
Scan Type	2θ-θ
Scan Speed	Variable 3.00 to 15.00°/min in ω
Scan Range (ω)	1.20° plus Kα separation
Background Measurement	Stationary crystal and stationary counter at beginning and end of scan, each for 25.0% of total scan time
Standard Reflections	2 measured every 100 reflections
Index Ranges	$0 \le h \le 8$; $-8 \le k \le 9$; $-16 \le l \le 17$
Reflections Collected	2528
Independent Reflections	2528
Observed Reflections	2202 ($F > 3\,\sigma(F)$)
Absorption Correction	NA
Solution and Refinement	Siemens SHELXTLPLUS (VMS)
Solution Method	Direct Methods
Refinement Method	Full-Matrix Least-Squares
Quantity Minimized	$\Sigma_w(F^o-F_c)^2$
Hydrogen Atoms	Riding model, fixed isotropic U
Weighting Scheme	$w^{-1} = \sigma^2(F) + 0.0002\,F^2$
Number of Parameters	154
Final R indices	R = 3.16%, wR = 3.40%
Goodness-of-Fit	1.34
Largest and Mean Δ/σ	0.003, 0.000
Data-to-Parameter Ratio	14.3 : 1
Largest Difference Peak	0.42 e$^-$/Å^3

L2542-17

$Cp^*Mo(NO)_2(CH_2Cl)$

Table 1. Atomic coordinates ($x10^4$) and equivalent isotropic displacement coefficients ($Å^2 \times 10^3$)

	x	y	z	U_{eq}
Mo	117(1)	2192(1)	2677(1)	43(1)
Cl	2752(2)	1422(3)	643(1)	114(1)
N(1)	441(6)	3695(4)	3383(2)	64(2)
O(1)	401(7)	4605(5)	3941(3)	107(2)
N(2)	2464(5)	227(5)	3119(2)	60(2)
O(2)	3776(6)	-1143(5)	3475(3)	105(2)
C(6)	1480(7)	3209(7)	1329(3)	75(2)
C(1)	-3293(6)	2722(5)	3242(3)	53(2)
C(2)	-2276(6)	792(5)	3276(3)	50(2)
C(3)	-1797(6)	550(5)	2303(3)	48(2)
C(4)	-2539(5)	2312(5)	1684(2)	44(1)
C(5)	-3432(6)	3663(5)	2257(3)	49(1)
C(11)	-4168(8)	3628(7)	4090(3)	82(2)
C(12)	-1872(8)	-717(6)	4163(3)	74(2)
C(13)	-868(8)	-1285(6)	1992(3)	73(2)
C(14)	-2562(7)	2669(6)	604(3)	64(2)
C(15)	-4519(7)	5712(6)	1877(3)	74(2)

$U_{eq} = \frac{1}{3} \Sigma_i \Sigma_j U_{ij}\ a_i^* a_j^*\ a_i\ a_j$

Table 2. Bond lengths (Å)

Mo-N(1)	1.820	(4)
Mo-N(2)	1.824	(3)
Mo-C(6)	2.187	(5)
Mo-C(1)	2.336	(4)
Mo-C(2)	2.335	(5)
Mo-C(3)	2.358	(5)
Mo-C(4)	2.398	(4)
Mo-C(5)	2.363	(4)
Cl-C(6)	1.810	(5)
N(1)-O(1)	1.185	(6)
N(2)-O(2)	1.168	(4)
C(1)-C(2)	1.420	(5)
C(1)-C(5)	1.431	(5)
C(1)-C(11)	1.508	(6)
C(2)-C(3)	1.436	(5)
C(2)-C(12)	1.503	(5)
C(3)-C(4)	1.415	(5)
C(3)-C(13)	1.508	(6)
C(4)-C(5)	1.417	(5)
C(4)-C(14)	1.506	(5)
C(5)-C(15)	1.509	(5)

L2542-18 18

$Cp^*Mo(NO)_2(CH_2Cl)$

Table 3. Bond angles (°)

N(1)-Mo-N(2)	94.7(2)	Mo-N(2)-O(2)	170.4(4)
N(1)-Mo-C(6)	97.7(2)	Mo-C(6)-Cl	112.3(3)
N(2)-Mo-C(6)	96.7(2)	Mo-C(1)-C(2)	72.3(2)
N(1)-Mo-C(1)	92.2(2)	Mo-C(1)-C(5)	73.3(2)
N(2)-Mo-C(1)	127.3(1)	C(2)-C(1)-C(5)	108.2(3)
C(6)-Mo-C(1)	134.0(1)	Mo-C(1)-C(11)	122.4(4)
N(1)-Mo-C(2)	116.3(2)	C(2)-C(1)-C(11)	126.2(3)
N(2)-Mo-C(2)	97.4(1)	C(5)-C(1)-C(11)	125.5(3)
C(6)-Mo-C(2)	141.8(2)	Mo-C(2)-C(1)	72.3(3)
C(1)-Mo-C(2)	35.4(1)	Mo-C(2)-C(3)	73.1(2)
N(1)-Mo-C(3)	150.2(1)	C(1)-C(2)-C(3)	107.2(3)
N(2)-Mo-C(3)	98.5(2)	Mo-C(2)-C(12)	122.2(3)
C(6)-Mo-C(3)	107.0(2)	C(1)-C(2)-C(12)	126.3(3)
C(1)-Mo-C(3)	58.7(1)	C(3)-C(2)-C(12)	126.5(3)
C(2)-Mo-C(3)	35.6(1)	Mo-C(3)-C(2)	71.3(3)
N(1)-Mo-C(4)	136.2(1)	Mo-C(3)-C(4)	74.2(3)
N(2)-Mo-C(4)	128.5(2)	C(2)-C(3)-C(4)	108.4(3)
C(6)-Mo-C(4)	85.2(2)	Mo-C(3)-C(13)	125.3(3)
C(1)-Mo-C(4)	58.2(1)	C(2)-C(3)-C(13)	125.5(3)
C(2)-Mo-C(4)	58.5(1)	C(4)-C(3)-C(13)	125.8(3)
C(3)-Mo-C(4)	34.6(1)	Mo-C(4)-C(3)	71.2(2)
N(1)-Mo-C(5)	102.6(2)	Mo-C(4)-C(5)	71.3(2)
N(2)-Mo-C(5)	155.1(2)	C(3)-C(4)-C(5)	108.2(3)
C(6)-Mo-C(5)	98.6(1)	Mo-C(4)-C(14)	127.7(3)
C(1)-Mo-C(5)	35.5(1)	C(3)-C(4)-C(14)	125.7(4)
C(2)-Mo-C(5)	58.9(1)	C(5)-C(4)-C(14)	125.9(3)
C(3)-Mo-C(5)	58.1(1)	Mo-C(5)-C(1)	71.2(2)
C(4)-Mo-C(5)	34.6(1)	Mo-C(5)-C(4)	74.0(2)
Mo-N(1)-O(1)	168.9(4)	C(1)-C(5)-C(4)	107.9(3)
		Mo-C(5)-C(15)	125.0(3)
		C(1)-C(5)-C(15)	126.6(4)
		C(4)-C(5)-C(15)	125.2(3)

L2542-19 19

$Cp^*Mo(NO)_2(CH_2Cl)$

Table 4. Anisotropic displacement coefficients ($Å^2$ x10^3)

	U_{11}	U_{22}	U_{33}	U_{12}	U_{13}	U_{23}
Mo	49(1)	43(1)	38(1)	-19(1)	-4(1)	-8(1)
Cl	97(1)	190(2)	87(1)	-79(1)	39(1)	-63(1)
N(1)	83(2)	50(2)	61(2)	-21(2)	-19(2)	-13(2)
O(1)	160(4)	71(2)	103(3)	-35(2)	-38(3)	-38(2)
N(2)	60(2)	56(2)	61(2)	-13(2)	-14(2)	-19(2)
O(2)	105(3)	73(2)	106(3)	11(2)	-38(2)	-23(2)
C(6)	75(3)	102(4)	65(3)	-54(3)	-4(2)	-9(3)
C(1)	53(2)	59(2)	48(2)	-21(2)	6(2)	-18(2)
C(2)	58(2)	53(2)	42(2)	-27(2)	1(2)	-4(2)
C(3)	52(2)	52(2)	49(2)	-26(2)	1(2)	-15(2)
C(4)	43(2)	54(2)	38(2)	-20(2)	-3(1)	-9(2)
C(5)	45(2)	49(2)	50(2)	-14(2)	-5(2)	-8(2)
C(11)	88(3)	89(3)	58(3)	-18(3)	19(2)	-30(3)
C(12)	99(4)	72(3)	54(3)	-44(3)	0(2)	4(2)
C(13)	93(3)	57(3)	78(3)	-30(2)	-5(3)	-27(2)
C(14)	64(3)	85(3)	45(2)	-30(2)	-8(2)	-11(2)
C(15)	75(3)	54(2)	77(3)	-5(2)	-17(2)	-10(2)

The anisotropic displacement exponent takes the form:
$-2\pi^2(h^2a^{*2}U_{11} + \ldots + 2hka^*b^*U_{12})$

Table 5. H-Atom coordinates (x10^4) and isotropic displacement coefficients ($Å^2$ x10^3)

	x	y	z	U
H(6A)	2476	3682	1469	80
H(6B)	404	4211	949	80
H(11A)	-5585	3719	4207	80
H(11B)	-3356	2899	4648	80
H(11C)	-4119	4845	3954	80
H(12A)	-3036	-1107	4290	80
H(12B)	-638	-1749	4067	80
H(12C)	-1684	-260	4700	80
H(13A)	-1964	-1667	1883	80
H(13B)	-72	-1158	1410	80
H(13C)	24	-2196	2486	80
H(14A)	-3823	2636	403	80
H(14B)	-2495	3864	343	80
H(14C)	-1385	1734	377	80
H(15A)	-5952	5974	1760	80
H(15B)	-4443	6385	2341	80
H(15C)	-3856	6080	1288	80

©1996 American Chemical Society Organometallics V15 Page 2534 Elcesser Supplemental Page 20

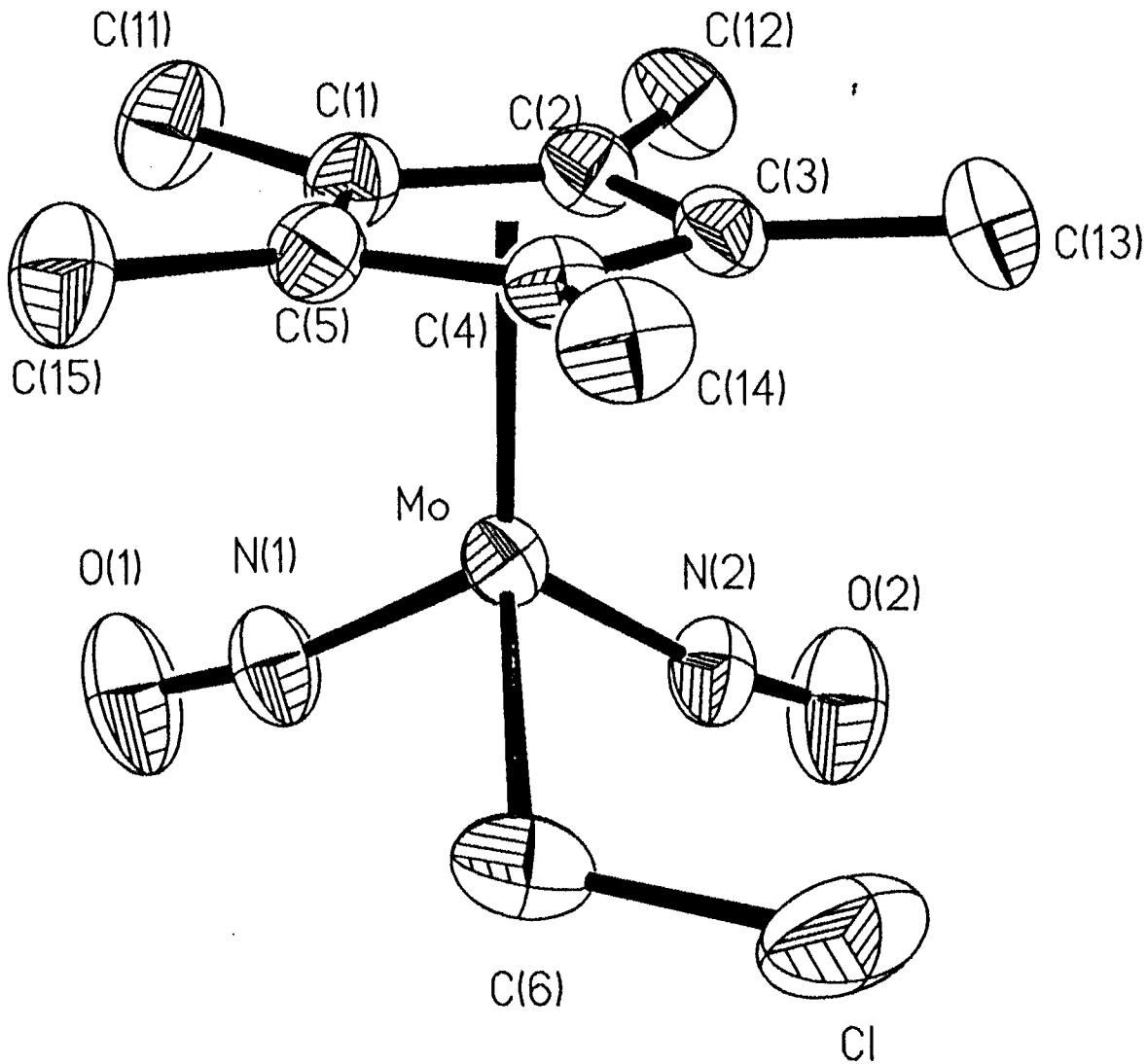

L25442-20

L2542-21 2

$Cp^*Mo(NO)_2(CH_3)$

STRUCTURE DETERMINATION SUMMARY

Empirical Formula	$C_{11}H_{18}N_2O_2Mo$
Color; Habit	Green Prisms
Crystal Size (mm)	0.30 x 0.35 x 0.40
Crystal System	Monoclinic
Space Group	$P2_1/c$
Cell Constants	a = 7.601 (2)Å
	b = 14.712 (4)Å
	c = 12.208 (3)Å
	β = 99.19 (2)°
Volume	1347.5 (6) Å^3
Z	4
Formula weight	306.2 amu
Density(calc.)	1.51 g/cm^3
Absorption Coefficient	0.939 mm^{-1}
F(000)	624 e
Diffractometer Used	Nicolet R3m/v
Radiation	MoKα (λ = 0.71073 Å)
Temperature (K)	294
Monochromator	Highly oriented graphite crystal
2θ Range, °	3 - 48
Scan Type	2θ-θ
Scan Speed	Variable 3.00 to 15.00°/min in ω
Scan Range (ω)	1.20° plus Kα separation
Background Measurement	Stationary crystal and stationary counter at beginning and end of scan, each for 25.0% of total scan time
Standard Reflections	2 measured every 100 reflections
Index Ranges	$0 \le h \le 8$; $0 \le k \le 16$; $-13 \le l \le 13$
Reflections Collected	2391
Independent Reflections	2124 (R_{int} = 1.7 %)
Observed Reflections	1722 ($F > 3\,\sigma(F)$)
Absorption Correction	NA
Solution and Refinement	Siemens SHELXTLPLUS (VMS)
Solution Method	Direct Methods
Refinement Method	Full-Matrix Least-Squares
Quantity Minimized	$\Sigma_w(F^o-F_c)^2$
Hydrogen Atoms	Riding model, fixed isotropic U
Weighting Scheme	$w^{-1} = \sigma^2(F) + 0.0009\,F^2$
Number of Parameters	145
Final R indices	R = 3.59%, wR = 4.59%
Goodness-of-Fit	1.13
Largest and Mean Δ/σ	0.000, 0.000
Data-to-Parameter Ratio	11.9 : 1
Largest Difference Peak	0.56 e$^-$/Å^3

L2542-22

$Cp^*Mo(NO)_2(CH_3)$

Table 1. Atomic coordinates ($x10^4$) and equivalent isotropic displacement coefficients ($Å^2 \times 10^3$)

	x	y	z	U_{eq}
Mo	625(1)	786(1)	2434(1)	44(1)
C(1)	3455(6)	1210(3)	3383(4)	46(2)
C(2)	3739(7)	903(3)	2326(4)	49(2)
C(3)	3245(7)	-32(3)	2221(4)	50(2)
C(4)	2699(7)	-297(3)	3224(5)	52(2)
C(5)	2822(6)	454(4)	3949(4)	48(2)
C(11)	3877(9)	2149(4)	3858(6)	78(2)
C(12)	4572(8)	1432(4)	1500(5)	75(2)
C(13)	3387(9)	-621(4)	1237(5)	81(3)
C(14)	2209(10)	-1247(4)	3506(6)	84(3)
C(15)	2532(8)	462(5)	5141(4)	77(2)
N(1)	-1078(7)	-61(4)	1991(5)	83(2)
O(1)	-2017(10)	-685(5)	1828(8)	157(4)
N(2)	-767(6)	1476(3)	3169(4)	60(2)
O(2)	-1562(7)	1903(4)	3754(4)	101(2)
C(6)	308(9)	1611(5)	941(5)	83(3)

$U_{eq} = \frac{1}{3} \Sigma_i \Sigma_j U_{ij} \; a_i^* a_j^* \; a_i \; a_j$

Table 2. Bond lengths (Å)

Mo-C(1)	2.359	(5)
Mo-C(2)	2.398	(5)
Mo-C(3)	2.377	(5)
Mo-C(4)	2.339	(5)
Mo-C(5)	2.337	(5)
Mo-N(1)	1.815	(6)
Mo-N(2)	1.806	(5)
Mo-C(6)	2.170	(7)
C(1)-C(2)	1.416	(7)
C(1)-C(5)	1.433	(7)
C(1)-C(11)	1.512	(8)
C(2)-C(3)	1.426	(7)
C(2)-C(12)	1.492	(8)
C(3)-C(4)	1.409	(8)
C(3)-C(13)	1.499	(8)
C(4)-C(5)	1.411	(7)
C(4)-C(14)	1.501	(8)
C(5)-C(15)	1.506	(8)
N(1)-O(1)	1.160	(9)
N(2)-O(2)	1.186	(7)

L2542-23

$Cp^*Mo(NO)_2(CH_3)$

Table 3. Bond angles (°)

C(1)-Mo-C(2)	34.6(2)
C(1)-Mo-C(3)	58.2(2)
C(2)-Mo-C(3)	34.8(2)
C(1)-Mo-C(4)	58.4(2)
C(2)-Mo-C(4)	57.7(2)
C(3)-Mo-C(4)	34.8(2)
C(1)-Mo-C(5)	35.5(2)
C(2)-Mo-C(5)	58.1(2)
C(3)-Mo-C(5)	58.4(2)
C(4)-Mo-C(5)	35.1(2)
C(1)-Mo-N(1)	151.5(2)
C(2)-Mo-N(1)	134.1(2)
C(3)-Mo-N(1)	100.9(2)
C(4)-Mo-N(1)	93.2(2)
C(5)-Mo-N(1)	118.6(2)
C(1)-Mo-N(2)	99.7(2)
C(2)-Mo-N(2)	130.5(2)
C(3)-Mo-N(2)	155.1(2)
C(4)-Mo-N(2)	126.0(2)
C(5)-Mo-N(2)	97.2(2)
N(1)-Mo-N(2)	95.0(2)
C(1)-Mo-C(6)	103.6(2)
C(2)-Mo-C(6)	83.8(2)
C(3)-Mo-C(6)	100.0(2)
C(4)-Mo-C(6)	134.7(2)
C(5)-Mo-C(6)	138.6(2)
N(1)-Mo-C(6)	98.9(3)
N(2)-Mo-C(6)	96.2(2)
Mo-C(1)-C(2)	74.2(3)
Mo-C(1)-C(5)	71.4(3)
C(2)-C(1)-C(5)	107.7(4)
Mo-C(1)-C(11)	123.4(4)
C(2)-C(1)-C(11)	126.0(5)
C(5)-C(1)-C(11)	126.2(5)
Mo-C(2)-C(1)	71.2(3)
Mo-C(2)-C(3)	71.8(3)
C(1)-C(2)-C(3)	108.3(5)
Mo-C(2)-C(12)	127.1(4)
C(1)-C(2)-C(12)	126.3(5)
C(3)-C(2)-C(12)	125.2(5)
Mo-C(3)-C(2)	73.4(3)
Mo-C(3)-C(4)	71.1(3)
C(2)-C(3)-C(4)	107.4(5)
Mo-C(3)-C(13)	123.3(4)
C(2)-C(3)-C(13)	125.3(5)
C(4)-C(3)-C(13)	127.2(5)
Mo-C(4)-C(3)	74.1(3)
Mo-C(4)-C(5)	72.4(3)
C(3)-C(4)-C(5)	109.2(5)
Mo-C(4)-C(14)	123.6(4)
C(3)-C(4)-C(14)	125.2(5)
C(5)-C(4)-C(14)	125.4(5)
Mo-C(5)-C(1)	73.1(3)
Mo-C(5)-C(4)	72.5(3)
C(1)-C(5)-C(4)	107.4(4)
Mo-C(5)-C(15)	124.5(4)
C(1)-C(5)-C(15)	124.9(5)
C(4)-C(5)-C(15)	127.4(5)
Mo-N(1)-O(1)	169.7(6)
Mo-N(2)-O(2)	172.9(4)

L2542-24

$Cp^*Mo(NO)_2(CH_3)$

Table 4. Anisotropic displacement coefficients ($Å^2$ x10^3)

	U_{11}	U_{22}	U_{33}	U_{12}	U_{13}	U_{23}
Mo.	37(1)	44(1)	48(1)	4(1)	3(1)	-1(1)
C(1)	39(3)	44(3)	54(3)	-2(2)	2(2)	-4(2)
C(2)	36(2)	55(3)	56(3)	1(2)	10(2)	6(2)
C(3)	44(3)	47(3)	59(3)	7(2)	8(2)	-8(2)
C(4)	41(3)	46(3)	69(3)	1(2)	5(2)	10(3)
C(5)	35(2)	61(3)	47(3)	6(2)	5(2)	4(2)
C(11)	69(4)	68(4)	95(5)	-15(3)	5(3)	-27(4)
C(12)	63(4)	89(5)	76(4)	-8(3)	20(3)	21(4)
C(13)	76(4)	82(5)	83(4)	9(4)	12(3)	-30(4)
C(14)	80(5)	54(4)	117(6)	-3(3)	11(4)	16(4)
C(15)	58(3)	123(5)	51(3)	4(4)	8(3)	12(3)
N(1)	49(3)	85(4)	110(4)	-8(3)	0(3)	-16(3)
O(1)	105(5)	113(5)	243(9)	-41(4)	0(5)	-35(5)
N(2)	50(3)	69(3)	60(3)	15(2)	9(2)	-4(2)
O(2)	107(4)	112(4)	90(3)	35(3)	36(3)	-9(3)
C(6)	63(4)	102(5)	81(4)	19(4)	5(3)	-11(4)

The anisotropic displacement exponent takes the form:
$-2\pi^2(h^2a^{*2}U_{11} + \ldots + 2hka^*b^*U_{12})$

Table 5. H-Atom coordinates (x10^4) and isotropic displacement coefficients ($Å^2$ x10^3)

	x	y	z	U
H(11A)	5101	2172	4207	80
H(11B)	3677	2590	3273	80
H(11C)	3120	2280	4397	80
H(12A)	5842	1358	1652	80
H(12B)	4130	1215	766	80
H(12C)	4280	2064	1551	80
H(13A)	4555	-886	1320	80
H(13B)	2509	-1095	1186	80
H(13C)	3187	-259	574	80
H(14A)	3265	-1572	3820	80
H(14B)	1399	-1226	4034	80
H(14C)	1649	-1551	2846	80
H(15A)	3623	305	5614	80
H(15B)	2162	1058	5330	80
H(15C)	1625	29	5238	80
H(6A)	-935	1725	694	80
H(6B)	923	2178	1098	80
H(6C)	797	1294	371	80

©1996 American Chemical Society Organometallics V15 Page 2534 Elcesser Supplemental Page 25

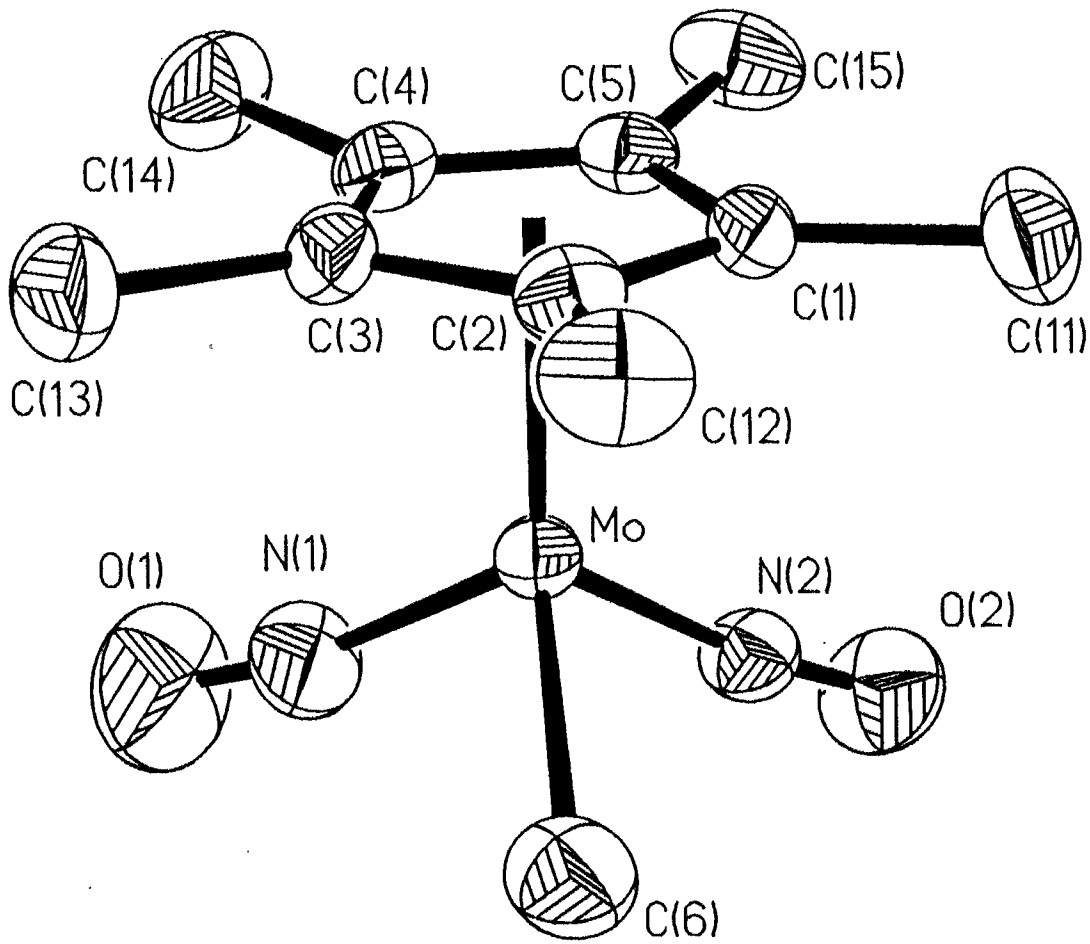

L2542-25
Wendy K.

L2542-26 26

$Cp^*Mo(NO)_2Cl$

STRUCTURE DETERMINATION SUMMARY

Empirical Formula	$C_{10}H_{15}N_2O2ClMo$
Color; Habit	Green prisms
Crystal Size (mm)	0.24 x 0.28 x 0.35
Crystal System	Monoclinic
Space Group	$P2_1/n$
Cell Constants	a = 12.527 (3) Å
	b = 7.536 (2) Å
	c = 14.413 (6) Å
	β = 105.91 (3)°
Volume	1308.5 (7) Å^3
Z	4
Formula weight	326.6 amu
Density(calc.)	1.658 g/cm^3
Absorption Coefficient	1.173 mm^{-1}
F(000)	656 e
Diffractometer Used	Nicolet R3m/v
Radiation	MoKα (λ = 0.71073 Å)
Temperature (K)	298
Monochromator	Highly oriented graphite crystal
2θ Range, °	3 - 50
Scan Type	2θ-θ
Scan Speed	Variable 3.00 to 15.00°/min in ω
Scan Range (ω)	1.20° plus Kα separation
Background Measurement	Stationary crystal and stationary counter at beginning and end of scan, each for 25.0% of total scan time
Standard Reflections	2 measured every 100 reflections
Index Ranges	$0 \le h \le 14$; $0 \le k \le 8$; $-17 \le l \le 16$
Reflections Collected	2605
Independent Reflections	2306 (R_{int} = 1.06%)
Observed Reflections	1972 ($F > 6\,\sigma(F)$)
Solution and Refinement	Siemens SHELXTLPLUS (VMS)
Solution Method	Direct Methods
Refinement Method	Full-Matrix Least-Squares
Quantity Minimized	$\Sigma_w(F^o-F_c)^2$
Hydrogen Atoms	Riding model, fixed isotropic U
Weighting Scheme	$w^{-1} = \sigma^2(F) + 0.0014\,F^2$
Number of Parameters	145
Final R indices	R = 0.0249, wR = 0.0351
Goodness-of-Fit	0.81
Largest and Mean Δ/σ	0.001, 0.000
Data-to-Parameter Ratio	12.2 : 1
Largest Difference Peak	0.26 e$^-$/Å^3

L2542-27 27

$Cp^*Mo(NO)_2Cl$

Table 1. Atomic coordinates ($x10^4$) and equivalent isotropic displacement coefficients ($Å^2 \times 10^3$)

	x	y	z	U_{eq}
Mo	7565(1)	1482(1)	5421(1)	35(1)
Cl	8681(1)	-402(1)	6667(1)	56(1)
N(1)	6206(3)	1428(4)	5661(2)	51(1)
O(1)	5305(3)	1709(5)	5731(3)	82(2)
N(2)	7139(3)	-22(5)	4386(2)	57(1)
O(2)	6872(3)	-649(6)	3628(3)	94(2)
C(1)	8479(3)	3260(5)	4539(3)	42(1)
C(2)	7469(3)	4101(5)	4566(2)	40(1)
C(3)	7559(3)	4601(5)	5535(2)	37(1)
C(4)	8602(3)	4003(5)	6115(2)	36(1)
C(5)	9179(3)	3182(4)	5493(3)	41(1)
C(11)	8774(4)	2665(6)	3643(3)	67(2)
C(12)	6520(4)	4553(7)	3704(3)	66(2)
C(13)	6727(3)	5662(6)	5869(3)	54(1)
C(14)	9042(3)	4273(6)	7188(3)	56(1)
C(15)	10339(3)	2463(6)	5787(3)	60(2)

$U_{eq} = \frac{1}{3} \Sigma_i \Sigma_j U_{ij}\ a_i^* a_j^*\ a_i\ a_j$

Table 2. Bond lengths (Å)

Mo-Cl	2.412 (1)
Mo-N(1)	1.829 (4)
Mo-N(2)	1.833 (4)
Mo-C(1)	2.349 (4)
Mo-C(2)	2.312 (4)
Mo-C(3)	2.356 (4)
Mo-C(4)	2.363 (3)
Mo-C(5)	2.371 (4)
N(1)-O(1)	1.179 (5)
N(2)-O(2)	1.153 (5)
C(1)-C(2)	1.425 (5)
C(1)-C(5)	1.415 (5)
C(1)-C(11)	1.505 (6)
C(2)-C(3)	1.420 (5)
C(2)-C(12)	1.505 (5)
C(3)-C(4)	1.418 (4)
C(3)-C(13)	1.494 (6)
C(4)-C(5)	1.437 (6)
C(4)-C(14)	1.506 (5)
C(5)-C(15)	1.500 (5)

X14 - Mo - 2.02 Å

L2542-28 28

Cp*Mo(NO)$_2$Cl

Table 3. Bond angles (°)

Cl-Mo-N(1)	103.1(1)
Cl-Mo-N(2)	102.8(1)
N(1)-Mo-N(2)	93.5(2)
Cl-Mo-C(1)	118.0(1)
N(1)-Mo-C(1)	137.0(1)
N(2)-Mo-C(1)	89.4(1)
Cl-Mo-C(2)	146.5(1)
N(1)-Mo-C(2)	101.8(1)
N(2)-Mo-C(2)	97.7(1)
C(1)-Mo-C(2)	35.6(1)
Cl-Mo-C(3)	123.2(1)
N(1)-Mo-C(3)	89.3(1)
N(2)-Mo-C(3)	131.9(1)
C(1)-Mo-C(3)	58.7(1)
C(2)-Mo-C(3)	35.4(1)
Cl-Mo-C(4)	91.1(1)
N(1)-Mo-C(4)	111.7(1)
N(2)-Mo-C(4)	147.7(2)
C(1)-Mo-C(4)	58.5(1)
C(2)-Mo-C(4)	58.8(1)
C(3)-Mo-C(4)	35.0(1)
Cl-Mo-C(5)	88.4(1)
N(1)-Mo-C(5)	146.2(1)
N(2)-Mo-C(5)	115.1(2)
C(1)-Mo-C(5)	34.9(1)
C(2)-Mo-C(5)	58.8(1)
C(3)-Mo-C(5)	58.5(1)
C(4)-Mo-C(5)	35.3(1)
Mo-N(1)-O(1)	167.1(3)
Mo-N(2)-O(2)	165.7(4)
Mo-C(1)-C(2)	70.8(2)
Mo-C(1)-C(5)	73.4(2)
C(2)-C(1)-C(5)	108.0(3)
Mo-C(1)-C(11)	124.4(3)
C(2)-C(1)-C(11)	125.8(3)
C(5)-C(1)-C(11)	126.1(4)
Mo-C(2)-C(1)	73.6(2)
Mo-C(2)-C(3)	74.0(2)
C(1)-C(2)-C(3)	108.3(3)
Mo-C(2)-C(12)	123.2(3)
C(1)-C(2)-C(12)	125.7(3)
C(3)-C(2)-C(12)	125.7(3)
Mo-C(3)-C(2)	70.6(2)
Mo-C(3)-C(4)	72.8(2)
C(2)-C(3)-C(4)	107.9(3)
Mo-C(3)-C(13)	124.9(3)
C(2)-C(3)-C(13)	125.7(3)
C(4)-C(3)-C(13)	126.3(3)
Mo-C(4)-C(3)	72.3(2)
Mo-C(4)-C(5)	72.6(2)
C(3)-C(4)-C(5)	108.0(3)
Mo-C(4)-C(14)	123.1(3)
C(3)-C(4)-C(14)	125.5(3)
C(5)-C(4)-C(14)	126.4(3)
Mo-C(5)-C(1)	71.7(2)
Mo-C(5)-C(4)	72.0(2)
C(1)-C(5)-C(4)	107.7(3)
Mo-C(5)-C(15)	124.5(2)
C(1)-C(5)-C(15)	125.7(4)
C(4)-C(5)-C(15)	126.5(3)

L2542-29 29

$Cp^*Mo(NO)_2Cl$

Table 4. Anisotropic displacement coefficients ($Å^2$ x10^3)

	U_{11}	U_{22}	U_{33}	U_{12}	U_{13}	U_{23}
Mo	35(1)	36(1)	35(1)	-5(1)	11(1)	1(1)
Cl	54(1)	55(1)	58(1)	6(1)	15(1)	16(1)
N(1)	42(2)	52(2)	61(2)	-5(1)	16(1)	10(2)
O(1)	42(2)	91(3)	118(3)	6(2)	32(2)	22(2)
N(2)	58(2)	54(2)	57(2)	-16(2)	14(2)	-6(2)
O(2)	101(3)	114(3)	62(2)	-29(2)	15(2)	-40(2)
C(1)	54(2)	39(2)	41(2)	-5(2)	27(2)	1(1)
C(2)	48(2)	37(2)	35(2)	-3(2)	12(2)	3(1)
C(3)	38(2)	35(2)	39(2)	-5(2)	13(1)	-2(1)
C(4)	38(2)	37(2)	35(2)	-6(1)	11(1)	-1(1)
C(5)	37(2)	37(2)	52(2)	-5(1)	18(2)	4(1)
C(11)	98(4)	62(3)	58(3)	-1(3)	50(3)	-2(2)
C(12)	73(3)	68(3)	46(2)	6(2)	0(2)	11(2)
C(13)	50(2)	51(2)	68(3)	6(2)	27(2)	-4(2)
C(14)	56(2)	67(3)	41(2)	-13(2)	6(2)	-8(2)
C(15)	42(2)	54(3)	84(3)	-1(2)	18(2)	5(2)

The anisotropic displacement exponent takes the form:
$-2\pi^2(h^2a^{*2}U_{11} + \ldots + 2hka^*b^*U_{12})$

Table 5. H-Atom coordinates (x10^4) and isotropic displacement coefficients ($Å^2$ x10^3)

	x	y	z	U
H(11A)	9145	3611	3411	80
H(11B)	9253	1649	3786	80
H(11C)	8106	2358	3158	80
H(12A)	6646	5697	3460	80
H(12B)	6469	3674	3212	80
H(12C)	5840	4576	3889	80
H(13A)	6899	6900	5851	80
H(13B)	5996	5443	5456	80
H(13C)	6756	5326	6518	80
H(14A)	9436	5378	7310	80
H(14B)	8437	4294	7477	80
H(14C)	9536	3318	7459	80
H(15A)	10855	3390	5758	80
H(15B)	10494	2025	6436	80
H(15C)	10412	1514	5364	80

L2542-30

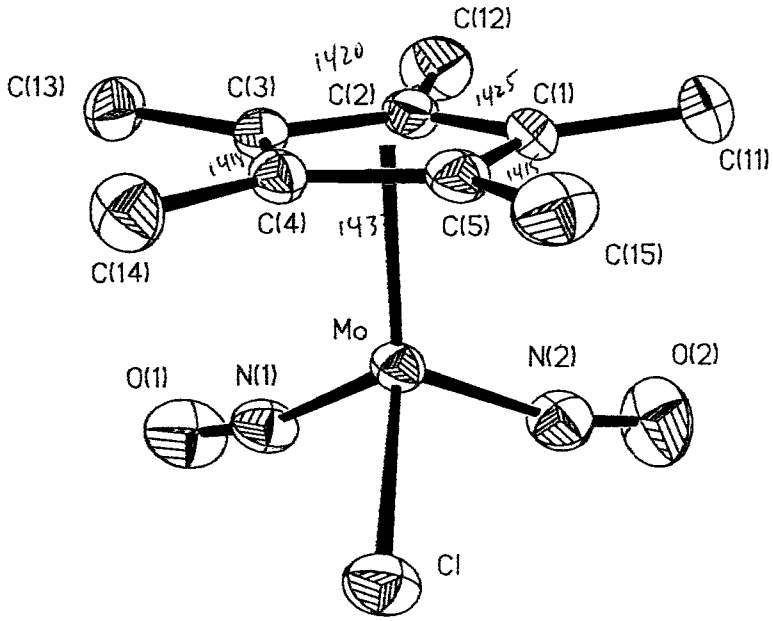

Wendy 15A

L2542-31 31

$CpMo(NO)_2Br$

STRUCTURE DETERMINATION SUMMARY

Empirical Formula	$C_5 H_5 N_2 O_2 Br Mo$
Color; Habit	Green prisms
Crystal Size (mm)	0.10 x 0.15 x 0.23
Crystal System	Triclinic
Space Group	$P\bar{1}$
Cell Constants	a = 6.933 (2) Å
	b = 6.937 (2) Å
	c = 9.995 (2) Å
	α = 87.94 (3)°
	β = 71.17 (3)°
	γ = 70.79 (3)°
Volume	428.3 (2) Å^3
Z	2
Formula weight	301.0 amu
Density(calc.)	2.33 g/cm^3
Absorption Coefficient	6.15 mm^{-1}
F(000)	284 e
Diffractometer Used	Nicolet R3m/v
Radiation	MoKα (λ = 0.71073 Å)
Temperature (K)	298
Monochromator	Highly oriented graphite crystal
2θ Range, °	3, 50
Scan Type	2θ-θ
Scan Speed	Variable 3.00 to 15.00°/min in ω
Scan Range (ω)	1.20° plus Kα separation
Background Measurement	Stationary crystal and stationary counter at beginning and end of scan, each for 25.0% of total scan time
Standard Reflections	2 measured every 100 reflections
Index Ranges	$-7 \le h \le 8$; $-8 \le k \le 8$; $0 \le l \le -11$
Reflections Collected	1519
Independent Reflections	1519
Observed Reflections	1173 ($F > 6\sigma(F)$)
Absorption Correction	Empirical psi scans
Min./Max. Transmission	0.85, 0.98
Solution and Refinement	Siemens SHELXTLPLUS (VMS)
Solution Method	Patterson
Refinement Method	Full-Matrix Least-Squares
Quantity Minimized	$\Sigma_w(F^o-F_o)^2$
Hydrogen Atoms	Riding model, fixed isotropic U
Weighting Scheme	$w^{-1} = \sigma^2(F) + 0.003\ F^2$
Number of Parameters	100
Final R indices	R = 3.88, wR = 5.27%
Goodness-of-Fit	0.84
Largest and Mean Δ/σ	0.001, 0.000
Data-to-Parameter Ratio	11.7 : 1
Largest Difference Peak	0.96 e$^-$/Å^3

L2542-3232

$CpMo(NO)_2Br$

Table 1. Atomic coordinates ($x10^4$) and equivalent isotropic displacement coefficients ($Å^2 \times 10^3$)

	x	y	z	U_{eq}
Mo	757(1)	3377(1)	2274(1)	37(1)
Br	1705(1)	6662(1)	1902(1)	61(1)
N(1)	2281(10)	1971(9)	546(6)	54(3)
O(1)	3021(11)	894(10)	-509(6)	81(3)
N(2)	2745(9)	1818(9)	3052(6)	48(2)
O(2)	3730(10)	647(10)	3682(7)	76(3)
C(1)	-2317(14)	4233(24)	4283(10)	90(6)
C(2)	-1873(15)	2264(20)	3754(16)	99(6)
C(3)	-2138(17)	2416(21)	2467(14)	98(6)
C(4)	-2759(17)	4360(28)	2197(13)	100(7)
C(5)	-2868(14)	5479(15)	3309(16)	91(5)

$U_{eq} = \frac{1}{3} \Sigma_i \Sigma_j U_{ij} \; a_i^* a_j^* \; a_i \; a_j$

Table 2. Bond lengths (Å)

Mo-Br	2.555	(1)
Mo-N(1)	1.821	(6)
Mo-N(2)	1.823	(6)
Mo-C(1)	2.328	(8)
Mo-C(2)	2.283	(12)
Mo-C(3)	2.266	(14)
Mo-C(4)	2.332	(12)
Mo-C(5)	2.352	(8)
N(1)-O(1)	1.178	(9)
N(2)-O(2)	1.183	(9)
C(1)-C(2)	1.382	(21)
C(1)-C(5)	1.342	(19)
C(2)-C(3)	1.352	(22)
C(3)-C(4)	1.321	(23)
C(4)-C(5)	1.346	(22)

L2542-33 33

$CpMo(NO)_2Br$

Table 3. Bond angles (°)

Br-Mo-N(1)	101.5(2)
Br-Mo-N(2)	102.0(2)
N(1)-Mo-N(2)	92.0(3)
Br-Mo-C(1)	103.9(4)
N(1)-Mo-C(1)	149.2(5)
N(2)-Mo-C(1)	99.4(3)
Br-Mo-C(2)	138.6(3)
N(1)-Mo-C(2)	117.1(4)
N(2)-Mo-C(2)	91.5(4)
C(1)-Mo-C(2)	34.9(5)
Br-Mo-C(3)	137.3(3)
N(1)-Mo-C(3)	92.4(4)
N(2)-Mo-C(3)	117.8(4)
C(1)-Mo-C(3)	57.0(5)
C(2)-Mo-C(3)	34.6(5)
Br-Mo-C(4)	104.0(5)
N(1)-Mo-C(4)	100.8(4)
N(2)-Mo-C(4)	148.0(4)
C(1)-Mo-C(4)	56.3(4)
C(2)-Mo-C(4)	56.5(5)
C(3)-Mo-C(4)	33.3(6)
Br-Mo-C(5)	87.1(3)
N(1)-Mo-C(5)	133.0(5)
N(2)-Mo-C(5)	131.7(4)
C(1)-Mo-C(5)	33.3(5)
C(2)-Mo-C(5)	56.1(4)
C(3)-Mo-C(5)	55.5(4)
C(4)-Mo-C(5)	33.4(5)
Mo-N(1)-O(1)	168.9(7)
Mo-N(2)-O(2)	167.1(6)
Mo-C(1)-C(2)	70.8(6)
Mo-C(1)-C(5)	74.3(5)
C(2)-C(1)-C(5)	106.4(12)
Mo-C(2)-C(1)	74.3(7)
Mo-C(2)-C(3)	72.0(8)
C(1)-C(2)-C(3)	106.7(12)
Mo-C(3)-C(2)	73.4(8)
Mo-C(3)-C(4)	76.1(9)
C(2)-C(3)-C(4)	109.7(14)
Mo-C(4)-C(3)	70.6(8)
Mo-C(4)-C(5)	74.1(7)
C(3)-C(4)-C(5)	107.5(13)
Mo-C(5)-C(1)	72.3(5)
Mo-C(5)-C(4)	72.5(6)
C(1)-C(5)-C(4)	109.6(12)

L 2542-34 34

$CpMo(NO)_2Br$

Table 4. Anisotropic displacement coefficients ($Å^2$ x10^3)

	U_{11}	U_{22}	U_{33}	U_{12}	U_{13}	U_{23}
Mo	37(1)	35(1)	37(1)	-9(1)	-10(1)	-1(1)
Br	70(1)	47(1)	76(1)	-27(1)	-30(1)	12(1)
N(1)	57(4)	48(4)	49(3)	-10(3)	-17(3)	-6(3)
O(1)	87(4)	79(4)	54(3)	-3(3)	-17(3)	-27(3)
N(2)	49(3)	47(3)	44(3)	-11(3)	-14(3)	7(3)
O(2)	72(4)	70(4)	84(4)	-14(3)	-33(3)	32(3)
C(1)	48(5)	164(12)	49(5)	-34(6)	0(4)	-42(6)
C(2)	54(6)	93(8)	136(11)	-29(6)	-12(6)	65(8)
C(3)	63(6)	116(10)	114(10)	-55(7)	1(6)	-42(8)
C(4)	60(6)	168(13)	77(7)	-36(8)	-37(5)	44(8)
C(5)	37(4)	51(5)	147(11)	-4(4)	8(6)	4(6)

The anisotropic displacement exponent takes the form:
$-2\pi^2(h^2a^{*2}U_{11} + \ldots + 2hka^*b^*U_{12})$

Table 5. H-Atom coordinates (x10^4) and isotropic displacement coefficients ($Å^2$ x10^3)

	x	y	z	U
H(1A)	-2420	4635	5219	80
H(2A)	-1630	1047	4254	80
H(3A)	-2083	1287	1911	80
H(4A)	-3194	4865	1396	80
H(5A)	-3361	6948	3410	80
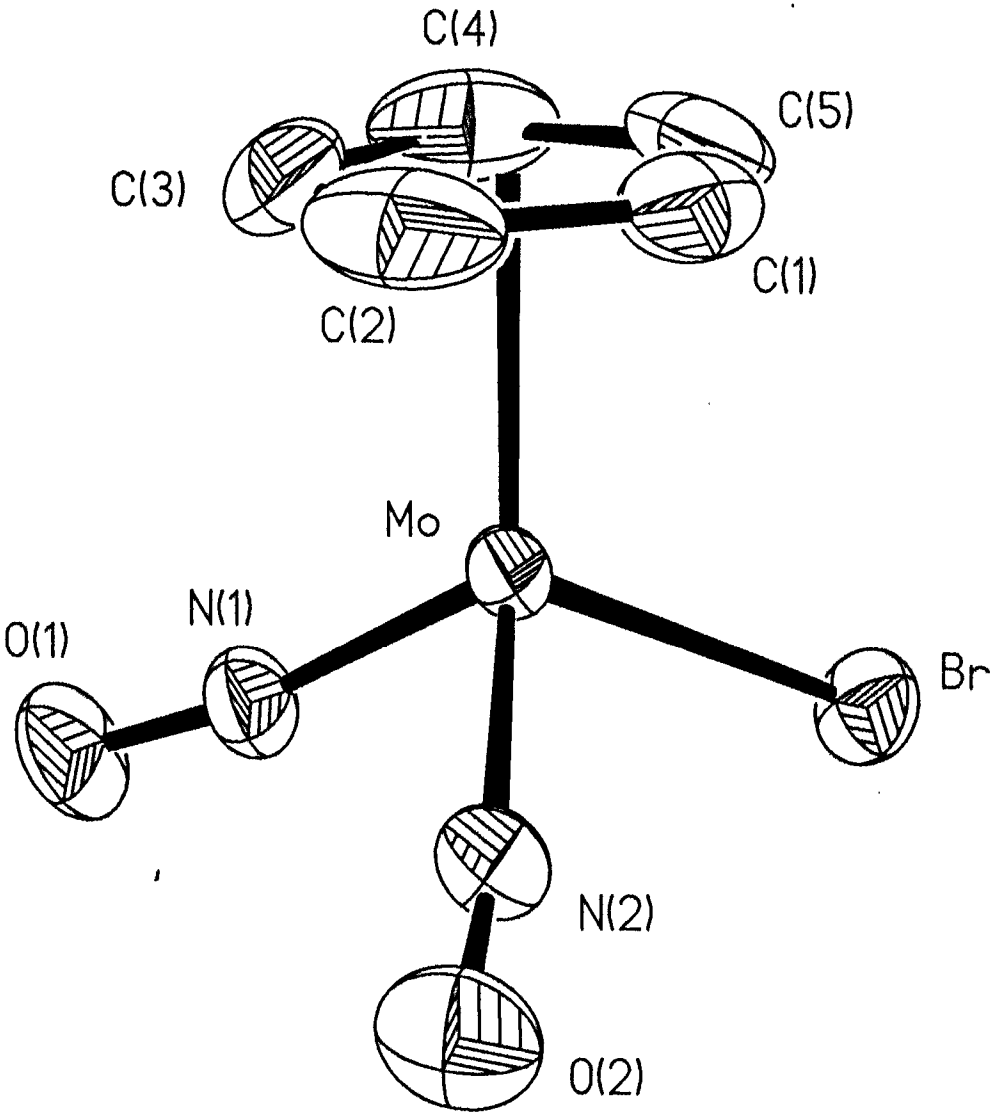
©1996 American Chemical Society