Supplementary Data

Hybrid Particle-Field Coarse-Grain Models for Biological Phospholipids

Antonio De Nicola[a,b], *Ying Zhao*[a], *Toshihiro Kawakatsu*[c], *Danilo Roccatano*[d]

and Giuseppe Milano[a,b]*

[a]Dipartimento di Chimica e Biologia, Università di Salerno, I-84084 via Ponte don Melillo Fisciano (SA), Italy

[b] IMAST Scarl-Technological District in Polymer and Composite Engineering, P.le Fermi 1, 80055 Portici (NA), Italy

[c]Department of Physics, Tohoku University, Aoba, Amaraki, Aoba-ku, Sendai 980-8578, Japan

[d]Jacobs University Bremen, Campus Ring 1, D-28759 Bremen, Germany

AUTHOR EMAIL ADDRESS: gmilano@unisa.it

Contents

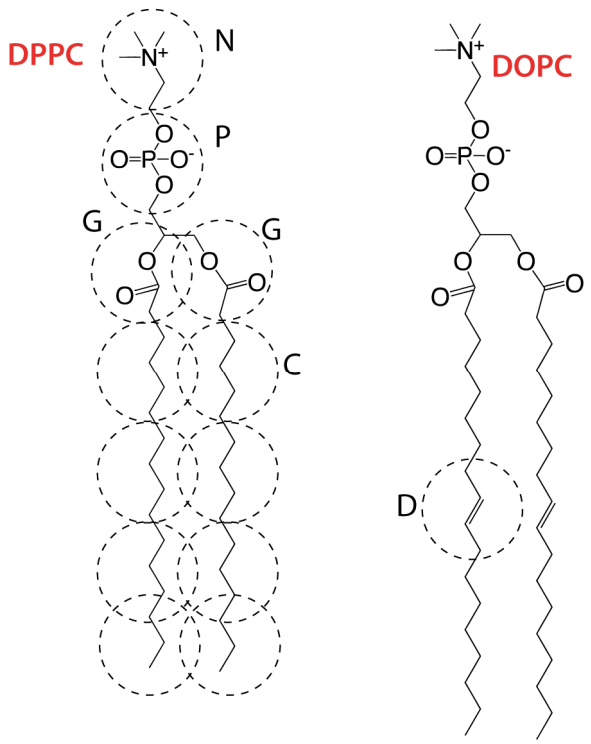

FigureS1. Coarse-graining mapping scheme for the DPPC and DOPC phospholipids. One coarse-grain bead correspond to four atoms.

Bonds are described by a harmonic potential $V_{bond}(R)$ type

$$V_{bond}(R) = \frac{1}{2} K_{bond} \left(R - R_{bond}\right)^2 \qquad (1)$$

where R_{bond} is the equilibrium distance and K_{bond} is the force constant of the bond. The stiffness of the chains is taken into account by a harmonic potential $V_{angle}(\theta)$ depending of the cosine of angle between atoms, where θ is the angle between two successive bonds.

$$V_{angle}(\theta) = \frac{1}{2} K_{angle} \left\{\cos(\theta) - \cos(\theta_0)\right\}^2 \qquad (2)$$

where K_{angle} is the force constant and θ_0 is the equilibrium bond angle.

Table S1. Parameters for bonding energetic term.

bonds	R_{bond} **(nm)**	K_{bond} **(kJ mol^{-1} nm^{-2})**
N-P	0.470	1250
P-G	0.470	1250
G-G	0.370	1250
G-C	0.470	1250
C-C	0.470	1250
D-C	0.470	1250

Table S2. Parameters for angle energetic term.

angle	θ_o (deg)	K_{angle} (kJ mol^{-1})
P-G-G	120	25.0
P-G-C	180	25.0
G-C-C	180	25.0
C-C-C	180	25.0
C-D-C	120	45.0
D-C-C	180	25.0

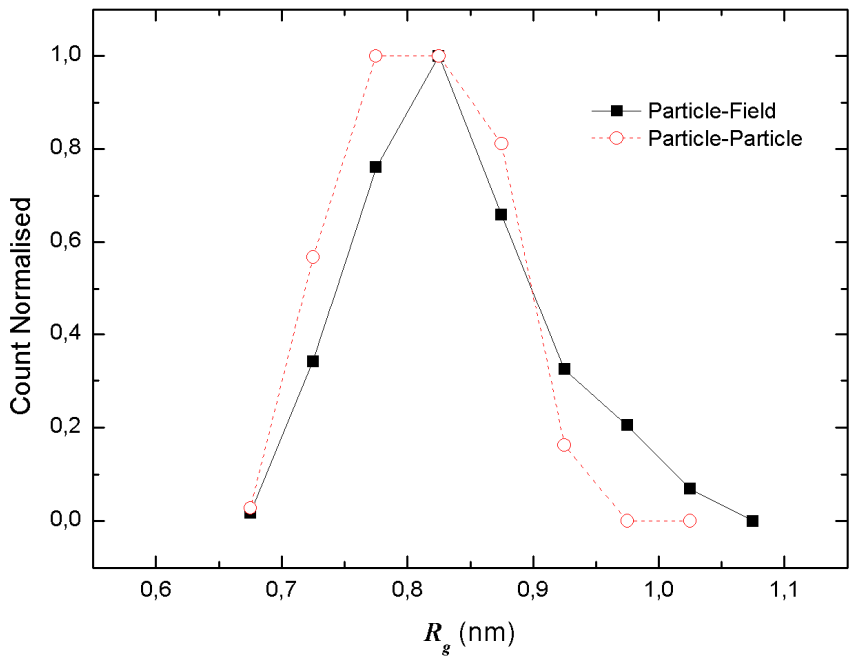

Figure S2. Distribution of radius of gyration for the Particle-Particle and Particle-Field simulations.

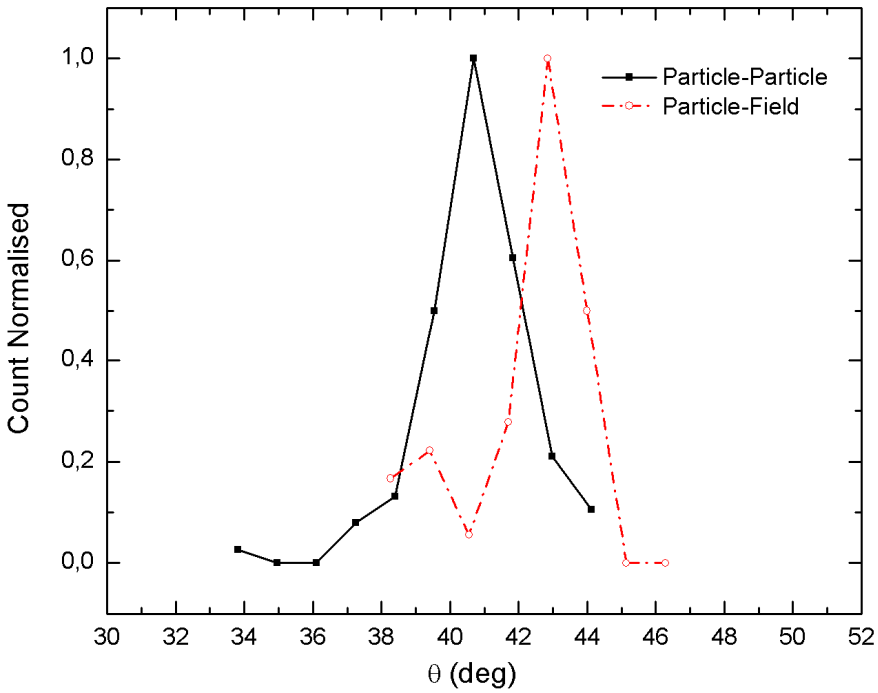

Figure S3. Distribution of angle between the two tails of the DPPC for Particle-Particle and Particle-Field simulations.

In the Figure S4 is shown the scheme to define the vectors ***a*** and ***b***.

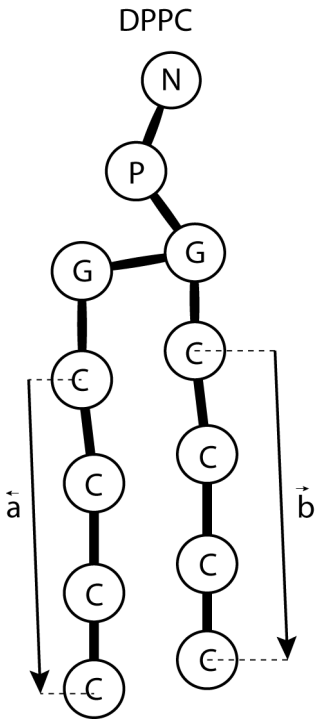

Figure 4. The vectors ***a*** and ***b*** are calculated, each, as the distance between two points identified by the first bead of type C and the last one.