SUPPORTING INFORMATION

Portable Pen-Probe Analyzer Based on Ion-Mobility Spectrometry for In-situ Analysis of Volatile Organic Compounds Emanating from Surfaces, and Wireless Transmission of the Acquired Spectra

Chun-Pei Shih[1], Kai-Chiang Yu[1], Hsuan-Ting Ou[1], Pawel L. Urban[1,2]*

[1] *Department of Chemistry, National Tsing Hua University*
101, Section 2, Kuang-Fu Rd., Hsinchu, 30013, Taiwan
[2] *Frontier Research Center on Fundamental and Applied Sciences of Matters, National Tsing Hua University*
101, Section 2, Kuang-Fu Rd., Hsinchu, 30013, Taiwan

* Corresponding author:
Prof. P.L. Urban
E-mail: urban@mx.nthu.edu.tw

Contents of this file:

- additional table (S1; list of materials);
- additional figures (S1-S6; APCI source, circuit diagrams, screen snapshot, calibration plots, ion-mobility spectra, evaluation of resolving power).

ADDITIONAL TABLE

Table S1. List of materials (note: 1 USD = 29.25 NTD on 25th September, 2020).

Component	Model number	Manufacturer/supplier	Number of units	Unit price / NTD	Total cost / NTD
High-voltage power supply 1	MPS15P10/24/VCC	Spellman High Voltage Electronics Corporation	1	35200	35200
High-voltage power supply 2	MPS20P10/24/VCC	Spellman High Voltage Electronics Corporation	1	43000	43000
FET complementary output pulser	-	GAA Custom Electronics, LLC	1	19715	19715
Air compressor	AMP1204	Air-Mart Industrial	1	9500	9500
Drift tube components	-	NTHU workshop	-	31598	31598
Micro gas pump	NMP015	DRF Corporation	1	12600	12600
Transimpedance amplifier	-	EMB PCB	1	9000	9000
Arduino Uno	Uno R3	Centenary Material Company	2	160	320
Arduino Due	Due R3	Centenary Material Company	1	560	560
Tinker board S	Tinker Board S	Asus	1	2540	2540
10.1inch HDMI LCD (B)	-	Waveshare Electronics	1	2900	2900
Rechargeable lithium battery	ICR18650-26(A^+)	a^+ plus	3	150	450
Lithium battery module	BT-024-050-A	Inner-Energy Technology Company	1	28800	28800
Supercapacitor module	CP-8.33F-32V-A	Inner-Energy Technology Company	1	6300	6300
Battery module charger	ALCP110-02403	Inner-Energy Technology Company	1	4500	4500
Acrylic component box	-	Yi-Feng Enterprise Company	1	1734	1734
Molecular sieve 5A moisture trap	20618	Supelco	1	5000	5000
⅛ inch PTFE tubing (10 m)	-	Centenary Material Company	-	966	966
Ion source holder components	-	NTHU workshop	1	12196	12196
Mobile Wi-Fi	M7200	Tp-link	1	2588	2588
GPS module	NEO-7N-0-002	u-blox	1	679	679
Temperature sensor	Tsys01	ClosedCube	1	300	300
DC-DC converter (battery module)	SD-500L-24	Inner-Energy Technology Company	1	9000	9000
DC-DC converter (amplifier)	TRI 6-2423	Kinsten Company	1	2600	2600
DC-DC converter	LM2596	Kinsten Company	2	100	200
DC-DC converter (SBC & monitor)	KSZ3R33S	Centenary Material Company	2	150	300
DC-DC converter (micro pump)	K241203	Centenary Material Company	1	300	300
Mass flow controller	F-201CL-013-1K0-A	Bronkhorst	1	27300	27300
Trolley	EKA-3MR3	Tanko Enterprise Company	1	9500	9500
Acrylic cover	-	Yi-Feng Enterprise Company	2	1200	2400
Minor electrical components (wires, resistors, relay board, *etc.*)	-	Centenary Material Company	-	-	< 5000
SUM / NTD					**287046**

ADDITIONAL FIGURES

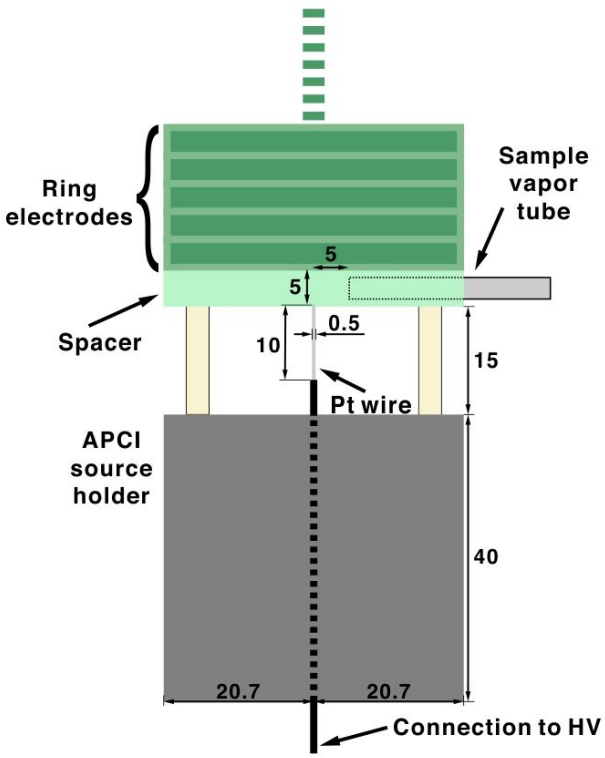

Figure S1. Geometrical parameters of the APCI source. Unit: mm.

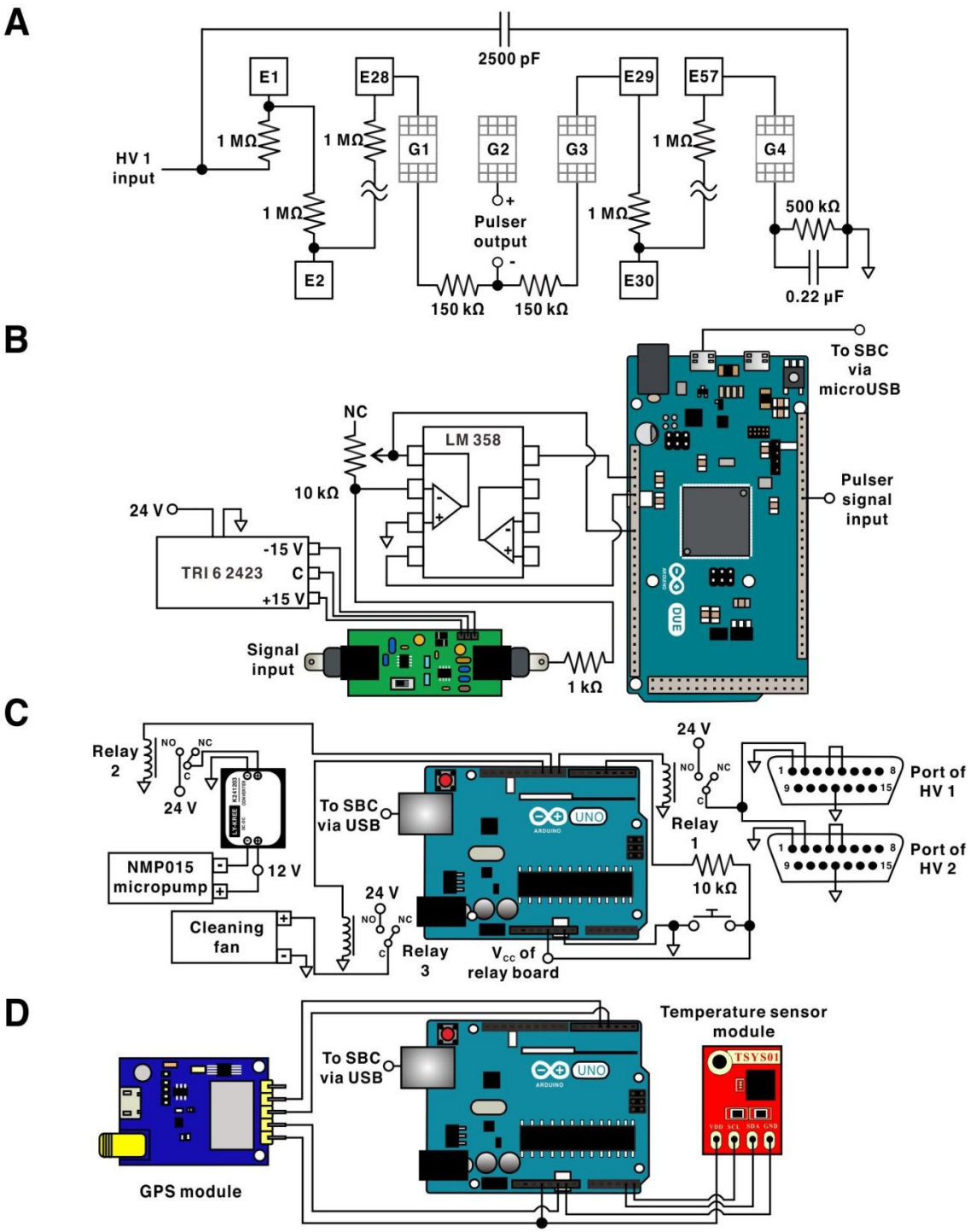

Figure S2. Circuit diagrams: (A) drift tube; (B) data acquisition system; (C) system control; (D) GPS module and temperature sensor.

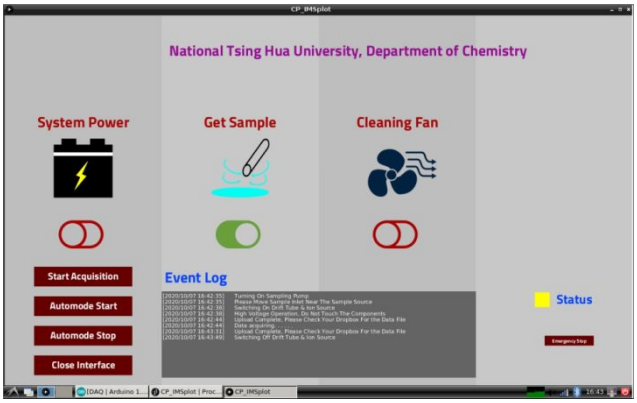

Figure S3. Screen snapshot of the GUI.

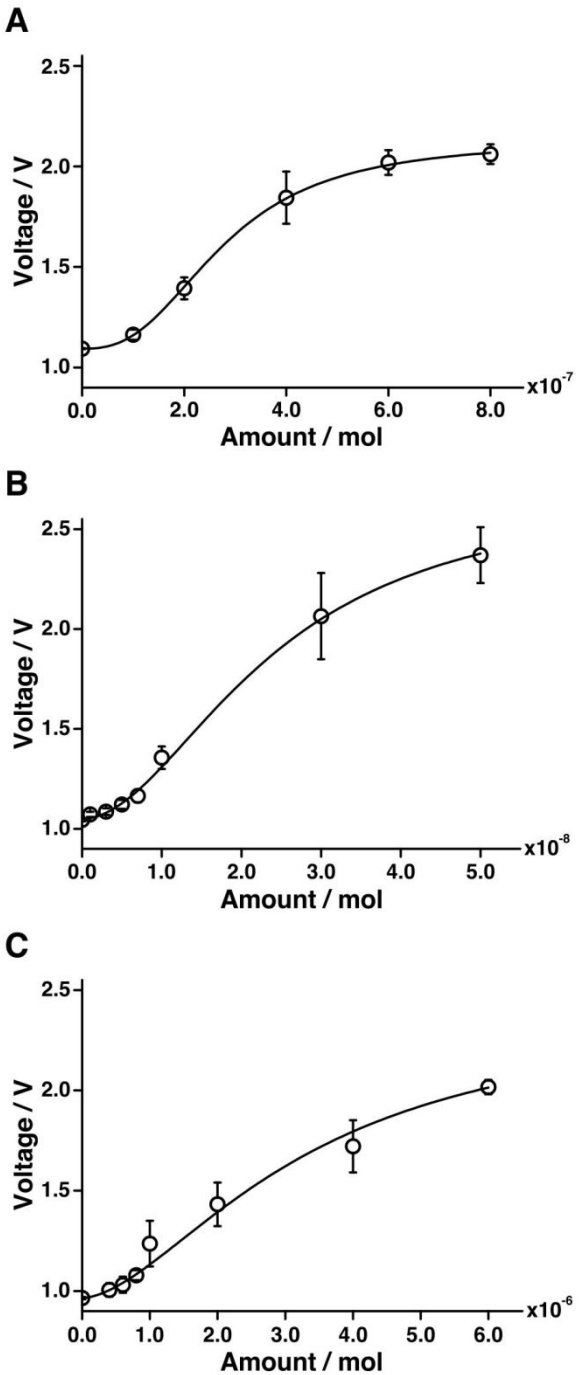

Figure S4. Calibration plots: (A) pyrrolidine (drift time: 7.78±0.02 ms); (B) 2,4-lutidine (drift time: 9.99±0.02 ms); (C) (−)-nicotine (drift time: 13.17±0.02 ms). See **Table 2** for the equations of the fitted functions.

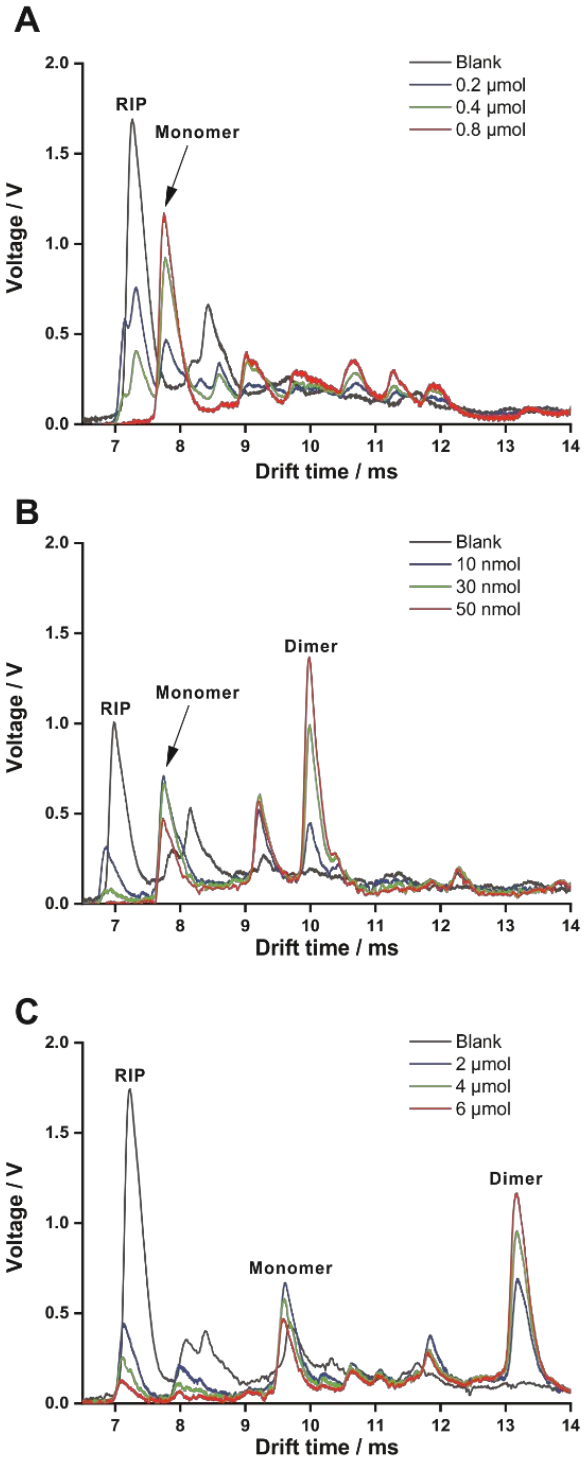

Figure S5. Baseline-subtracted ion-mobility spectra of: (A) pyrrolidine; (B) 2,4-lutidine; (C) (−)-nicotine. Putative assignment of the monomer and dimer peaks.

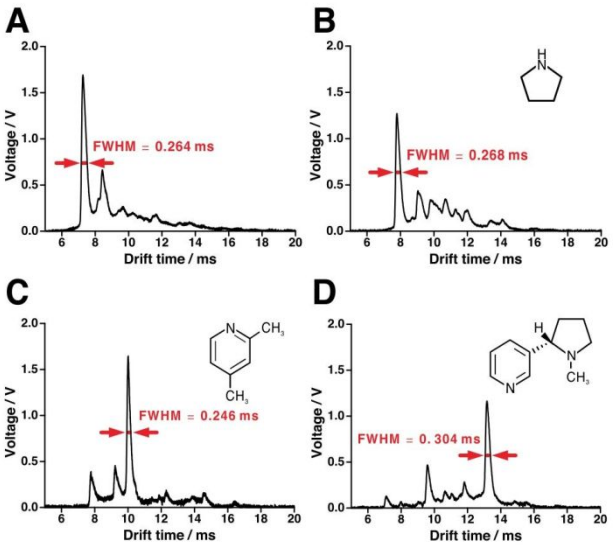

Figure S6. Baseline-subtracted ion-mobility spectra based on which resolving powers have been evaluated: (A) instrumental blank (RIP, drift time: (7.31±0.05) ms, average resolving power: 26.6±3.8, $n = 3$); (B) 800 nmol of pyrrolidine (drift time: 7.78±0.02 ms); (C) 50 nmol of 2,4-lutidine (drift time: 9.99±0.02 ms); (D) 6000 nmol of (−)-nicotine (drift time: 13.17±0.02 ms).