Use of ultra-short columns for therapeutic protein separations, Part 2: Designing the optimal column dimension for reversed phase liquid chromatography

Szabolcs FEKETE[1]*, Amarande MURISIER[1], Jennifer M. NGUYEN[2], Michael J. BOLTON[3], Jonathan BELANGER[2],Alain BECK[4], Jean-Luc VEUTHEY[1], Kevin WYNDHAM[2], Matthew A. LAUBER[2], Davy GUILLARME[1]

[1] Institute of Pharmaceutical Sciences of Western Switzerland, University of Geneva, CMU-Rue Michel Servet 1, 1211 Geneva 4, Switzerland
[2]Waters Corporation, 34 Maple Street, Milford, MA 01757-3696, United States
[3]Sensata Technologies, 529 Pleasant St, Attleboro, MA 027030-2421, United States
[4]Center of Immunology Pierre Fabre, 5 Avenue Napoléon III, BP 60497, 74160 Saint-Julien-en-Genevois, France

Supplementary figures, tables

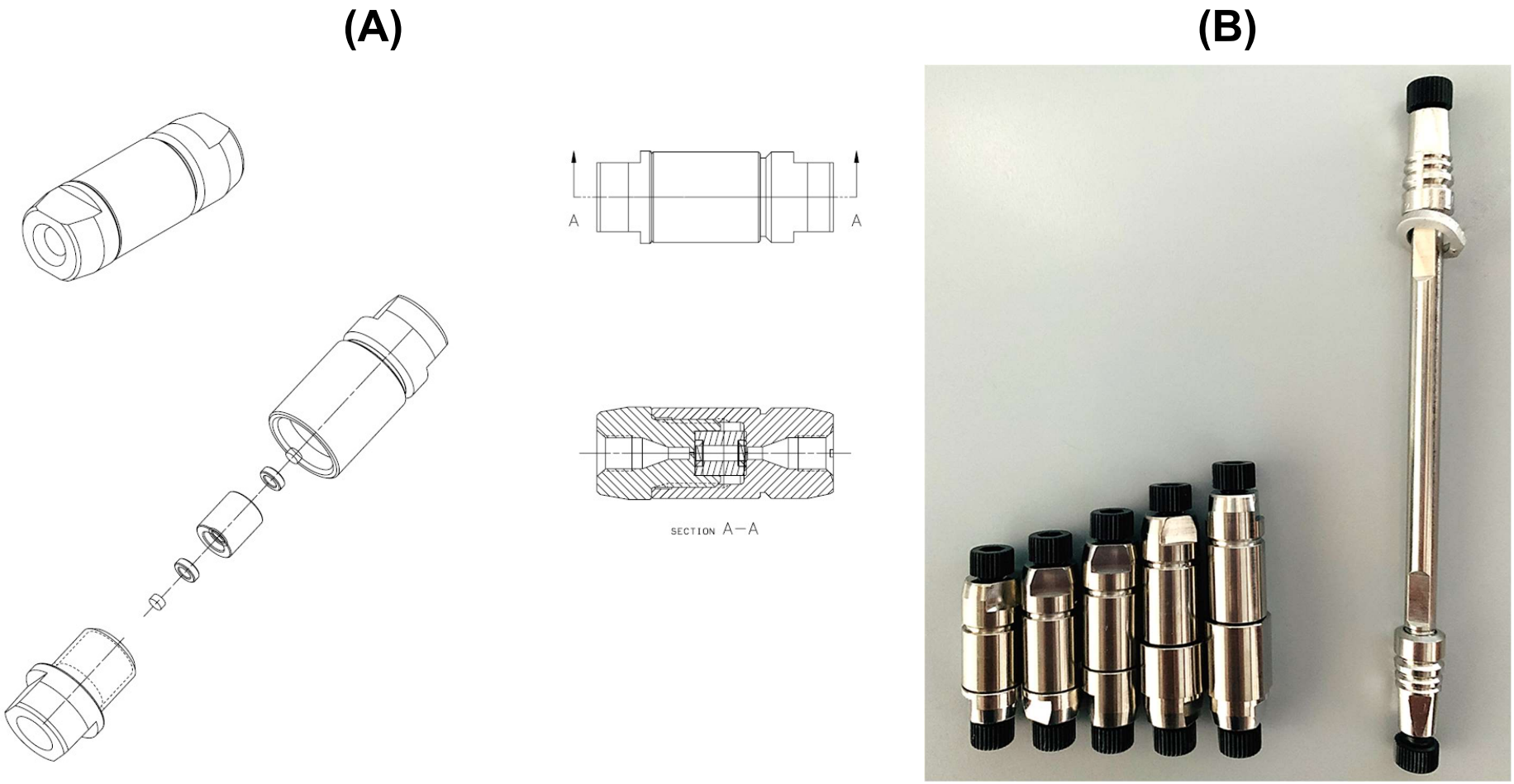

Supplementary Figure 1. CAD drawings of the new column hardware design (A) and photo of the 2, 5, 10, 15 and 20 mm long prototype columns in comparison with a commercial 50 x 2.1 mm column (B).

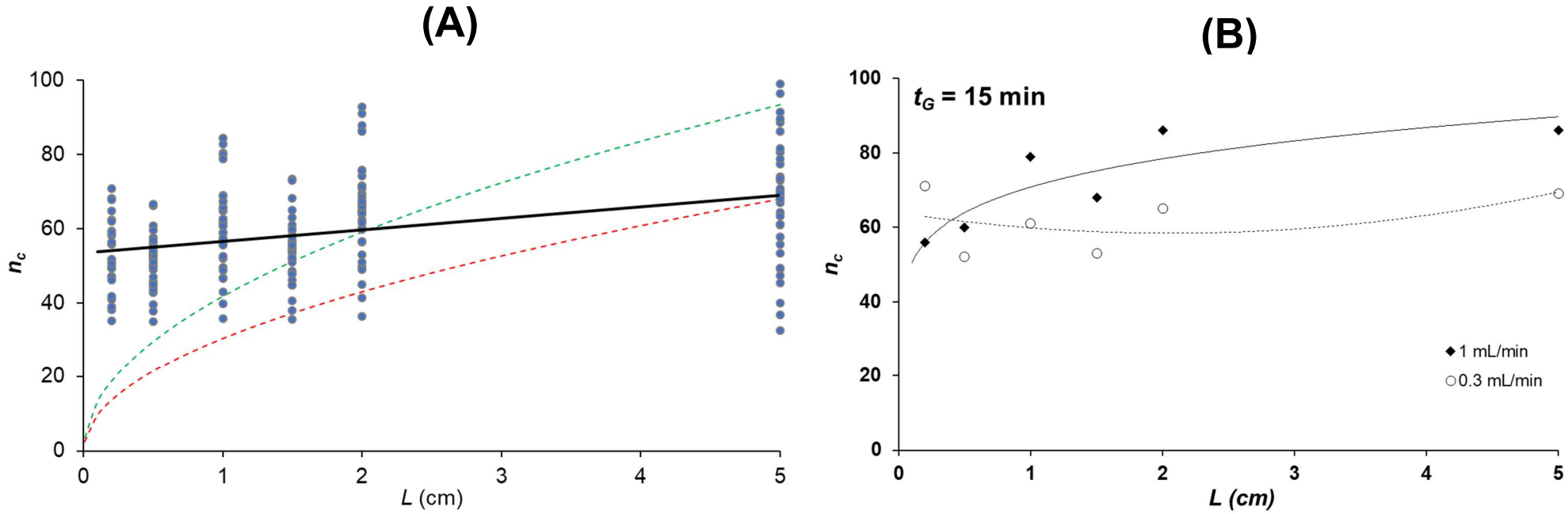

Supplementary Figure 2. Experimentally measured peak capacity values (peak capacity range obtainable in a practically interesting range of t_G and F) as a function of column length - taking into account all conditions (all t_G and F) – (A) and representative examples on the evolution of peak capacity vs. column length at t_G = 15 min and at F_1 = 1 mL/min and F_2 = 0.3 mL/min (B).

On panel (A), a regression line (black line) indicates the trend of the experimental data. The red and green dashed lines corresponds to the peak capacity of 5 and 2 cm long columns. These two curves were constructed based on experimental peak capacities obtained on 5 and 2 cm columns, respectively, and extrapolated down to a column length of 0 cm by calculation of peak capacity values proportional to the square root of column length.

Based on linear regression (black line), the lower and upper confidence limits (95%) of intercept were 50.9 and 56.0, respectively (significantly different from 0, $p = 2.7 \times 10^{-99}$). The lower and upper confidence limits (95%) of the slope were 2.0 and 4.2 (significantly different from 0, $p = 3.7 \times 10^{-8}$).

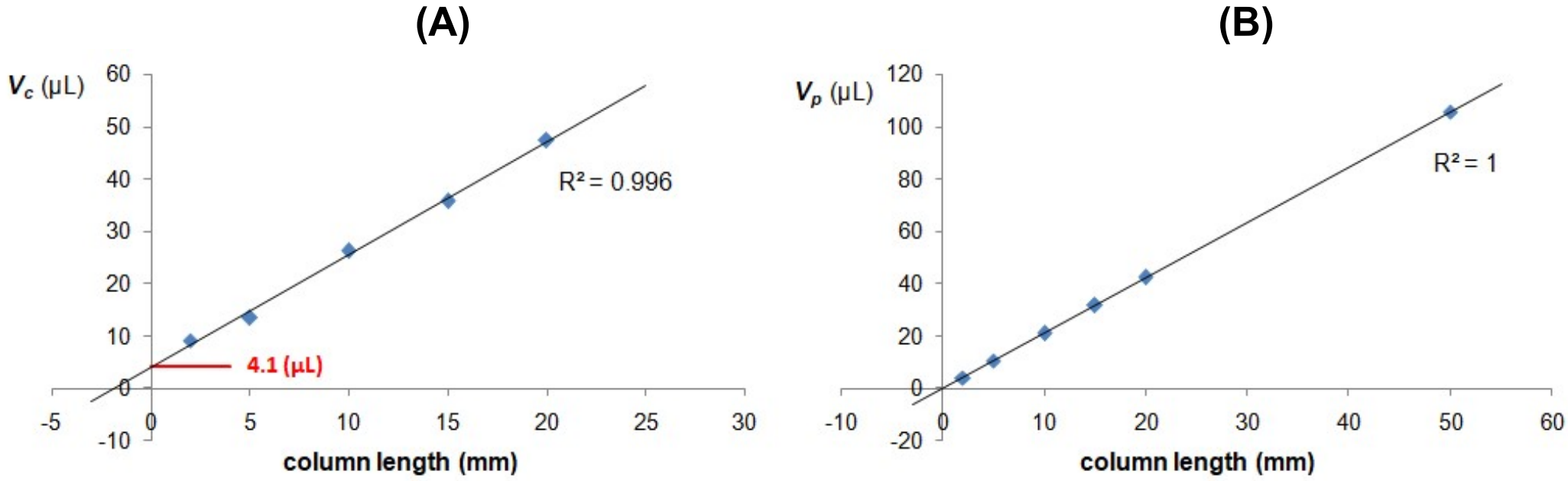

Supplementary Figure 3. Measured column volume (A) and packed bed volume (B) as a function of column length.

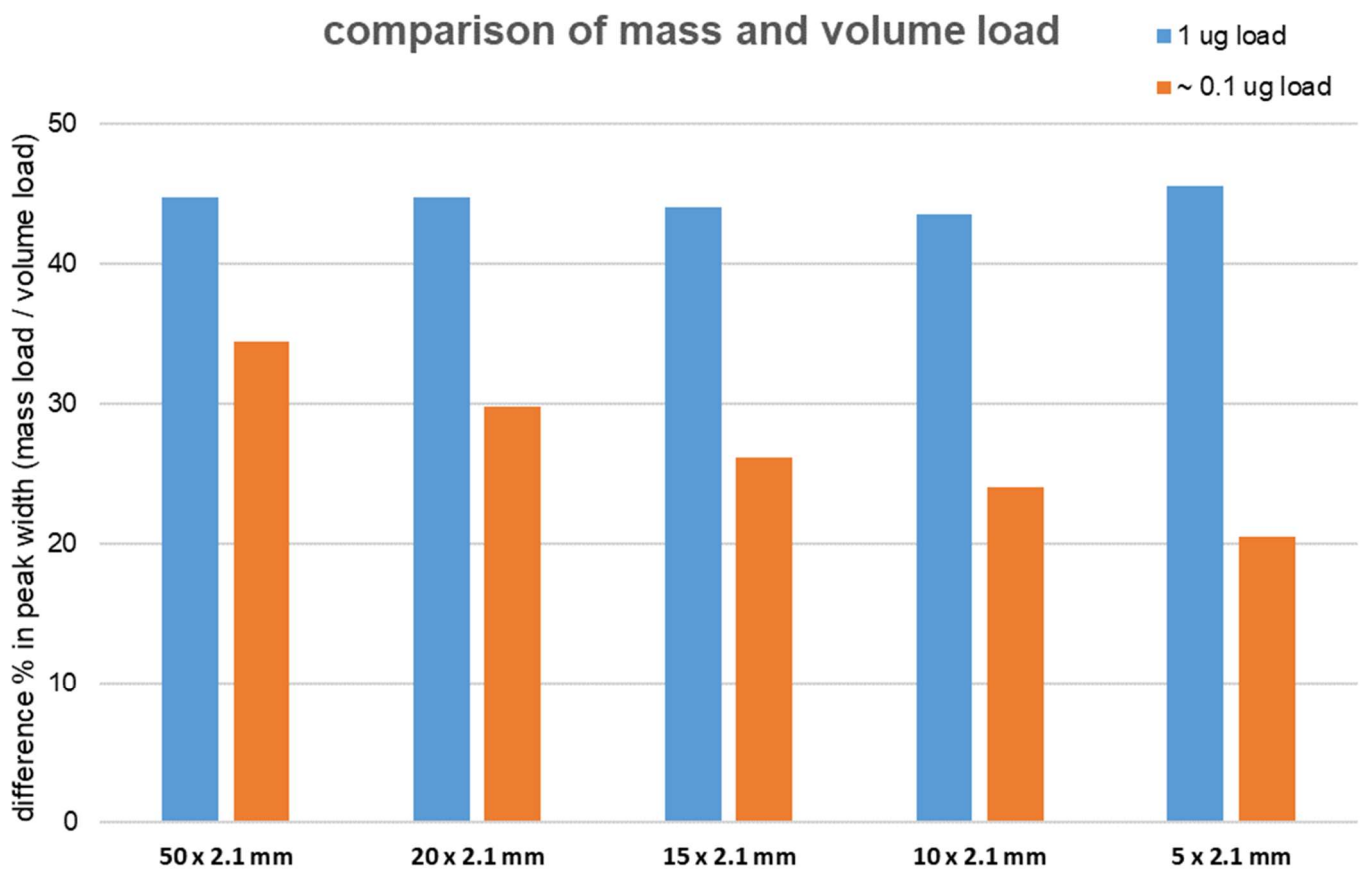

Supplementary Figure 4. Comparison of peak widths obtained by loading ~ 1 µg (blue bars) and ~ 0.1 µg (orange bars) samples. In case of ~ 1 µg load, 0.1 and 5 µL injection volumes, while for the ~ 0.1 µg load, 0.1 and 1 µL injection volumes are compared. The results are presented as % peak width (low volume injection / high volume injection). Sample: light-chain fragment of pembrolizumab.

Supplementary Table 1. retention time and peak width data of intact pembrolizumab

		Pembrolizumab											
		50 x 2.1 mm		20 x 2.1 mm		15 x 2.1 mm		10 x 2.1 mm		5 x 2.1 mm		2 x 2.1 mm	
Flow rate (mL/min)	Gradient time (min)	Rt	w50%	Rt	w50%	Rt	w50%	Rt	w50%	Rt	w50%	Rt	w50%
0.3	2	1.651	3.06E-02	1.4	3.06E-02	1.269	3.21E-02	1.339	3.23E-02	1.183	3.38E-02	1.191	3.39E-02
	3.5	2.303	4.16E-02	2.02	4.03E-02	1.826	4.55E-02	1.97	4.39E-02	1.736	4.86E-02	1.793	4.22E-02
	5	2.976	5.20E-02	2.655	5.15E-02	2.402	6.09E-02	2.622	5.67E-02	2.314	6.51E-02	2.383	5.34E-02
	10	4.996	8.94E-02	4.623	9.18E-02	4.138	1.15E-01	4.631	1.01E-01	4.038	1.20E-01	4.198	1.00E-01
	15	7.018	1.27E-01	6.543	1.37E-01	5.901	1.67E-01	6.615	1.47E-01	5.824	1.73E-01	6.105	1.26E-01
	20	8.963	1.66E-01	8.41	1.82E-01	7.568	2.22E-01	8.547	1.94E-01	7.516	2.29E-01	*NA*	*NA*
	25	10.91	2.11E-01	10.274	2.28E-01	9.24	2.76E-01	10.475	2.45E-01	9.217	2.85E-01	*NA*	*NA*
0.4	2	1.499	2.84E-02	1.282	2.73E-02	1.171	3.03E-02	1.235	2.94E-02	1.101	3.13E-02	1.096	3.13E-02
	3.5	2.189	3.93E-02	1.921	3.82E-02	1.755	4.45E-02	1.888	4.15E-02	1.68	4.68E-02	1.712	4.09E-02
	5	2.851	4.89E-02	2.547	4.85E-02	2.33	5.78E-02	2.525	5.29E-02	2.252	6.07E-02	2.296	5.12E-02
	10	4.938	8.51E-02	4.523	8.85E-02	4.123	1.10E-01	4.548	9.60E-02	4.039	1.14E-01	4.125	9.55E-02
	15	7.011	1.20E-01	6.476	1.28E-01	5.902	1.59E-01	6.555	1.38E-01	5.826	1.66E-01	5.981	1.31E-01
	20	9.068	1.66E-01	8.395	1.74E-01	7.638	2.11E-01	8.545	1.90E-01	7.573	2.18E-01	*NA*	*NA*
	25	11.24	2.20E-01	10.354	2.32E-01	9.37	2.72E-01	10.599	2.53E-01	9.319	2.83E-01	*NA*	*NA*
0.5	2	1.383	2.68E-02	1.217	2.54E-02	1.126	2.86E-02	1.187	2.72E-02	1.072	3.00E-02	1.058	2.91E-02
	3.5	2.124	3.52E-02	1.85	3.60E-02	1.71	4.22E-02	1.832	3.93E-02	1.653	4.44E-02	1.63	4.43E-02
	5	2.799	4.51E-02	2.464	4.69E-02	2.281	5.67E-02	2.464	5.17E-02	2.222	5.96E-02	2.193	6.02E-02
	10	5	7.53E-02	4.487	8.34E-02	4.151	1.05E-01	4.544	9.15E-02	4.101	1.10E-01	4.151	8.80E-02
	15	7.156	1.19E-01	6.431	1.24E-01	5.939	1.53E-01	6.552	1.36E-01	5.892	1.60E-01	5.897	1.45E-01
	20	9.386	1.60E-01	8.439	1.79E-01	7.728	2.16E-01	8.656	1.96E-01	7.69	2.26E-01	*NA*	*NA*
	25	11.351	1.83E-01	10.391	2.08E-01	9.529	2.71E-01	10.644	2.22E-01	9.494	2.83E-01	*NA*	*NA*
0.7	2	1.324	2.33E-02	1.133	2.36E-02	1.054	2.60E-02	1.108	2.52E-02	1.015	2.72E-02	0.986	2.85E-02
	3.5	2.033	3.27E-02	1.769	3.42E-02	1.645	3.95E-02	1.754	3.72E-02	1.609	4.19E-02	1.563	4.45E-02
	5	2.726	4.15E-02	2.391	4.46E-02	2.226	5.29E-02	2.388	4.88E-02	2.188	5.62E-02	2.129	6.04E-02
	10	4.981	7.18E-02	4.416	7.80E-02	4.105	9.74E-02	4.457	8.62E-02	4.092	1.04E-01	4.06	9.20E-02
	15	7.267	9.97E-02	6.457	1.20E-01	5.962	1.55E-01	6.564	1.33E-01	5.952	1.66E-01	5.847	1.52E-01
	20	9.387	1.19E-01	8.477	1.37E-01	7.891	2.00E-01	8.615	1.48E-01	7.87	2.17E-01	*NA*	*NA*
	25	11.438	1.53E-01	10.319	1.69E-01	9.641	2.29E-01	10.508	1.86E-01	9.598	2.46E-01	*NA*	*NA*
1	2	1.233	2.28E-02	1.062	2.28E-02	0.995	2.46E-02	1.035	2.41E-02	0.942	2.64E-02	0.917	3.07E-02
	3.5	1.942	3.31E-02	1.695	3.35E-02	1.593	3.72E-02	1.677	3.61E-02	1.524	4.09E-02	1.497	4.54E-02
	5	2.633	4.29E-02	2.314	4.39E-02	2.176	4.97E-02	2.297	4.75E-02	2.093	5.52E-02	2.079	5.78E-02
	10	4.91	7.47E-02	4.35	7.85E-02	4.073	9.45E-02	4.36	8.66E-02	3.94	1.05E-01	3.884	1.19E-01
	15	7.09	1.03E-01	6.332	1.03E-01	5.948	1.31E-01	6.366	1.13E-01	5.785	1.50E-01	5.762	1.59E-01
	20	9.253	1.32E-01	8.264	1.30E-01	7.772	1.62E-01	8.333	1.44E-01	7.604	1.81E-01	*NA*	*NA*
	25	11.431	1.62E-01	10.171	1.60E-01	9.55	2.04E-01	10.279	1.76E-01	9.366	2.24E-01	*NA*	*NA*

Supplementary Table 2. retention time and peak width data of reduced pembrolizumab (LC: light chain peak, HC: heavy chain peak)

		reducedPembrolizumab																							
		LC		HC		LC		HC		LC		HC		LC		HC		LC		HC		LC		HC	
		50 x 2.1 mm		50 x 2.1 mm		20 x 2.1 mm		20 x 2.1 mm		15 x 2.1 mm		15 x 2.1 mm		10 x 2.1 mm		10 x 2.1 mm		5 x 2.1 mm		5 x 2.1 mm		2 x 2.1 mm		2 x 2.1 mm	
Flow rate (mL/min)	Gradient time (min)	Rt	w50%	Rt	w50%	Rt	w50%	Rt	w50%	Rt	w50%	Rt	w50%	Rt	w50%	Rt	w50%	Rt	w50%	Rt	w50%	Rt	w50%	Rt	w50%
0.3	2	1.52	NA	1.572	3.26E-02	1.206	2.70E-02	1.289	2.71E-02	1.027	2.85E-02	1.145	2.93E-02	1.078	3.13E-02	1.188	3.11E-02	0.85	3.72E-02	1.009	3.88E-02	0.871	3.56E-02	1.039	3.29E-02
	3.5	1.996	3.79E-02	2.145	4.12E-02	1.607	3.71E-02	1.801	3.73E-02	1.328	4.13E-02	1.583	4.23E-02	1.449	4.41E-02	1.685	4.37E-02	1.075	5.50E-02	1.402	5.69E-02	1.188	4.92E-02	1.519	4.40E-02
	5	2.465	4.74E-02	2.73	5.08E-02	2.009	4.84E-02	2.333	4.92E-02	1.621	5.48E-02	2.03	5.68E-02	1.817	5.75E-02	2.196	5.72E-02	1.298	7.30E-02	1.806	7.61E-02	1.481	6.36E-02	1.984	5.54E-02
	10	3.746	7.76E-02	4.433	8.41E-02	3.119	8.37E-02	3.889	8.80E-02	2.421	9.58E-02	3.338	1.04E-01	2.867	9.79E-02	3.724	1.01E-01	1.924	1.22E-01	3.003	1.34E-01	2.265	1.05E-01	3.333	9.67E-02
	15	4.997	1.07E-01	6.135	1.18E-01	4.168	1.19E-01	5.419	1.28E-01	3.14	1.37E-01	4.612	1.49E-01	3.812	1.38E-01	5.196	1.45E-01	2.418	1.82E-01	4.141	1.94E-01	2.966	1.45E-01	4.684	1.29E-01
	20	6.067	1.40E-01	7.718	1.52E-01	5.04	1.60E-01	6.845	1.69E-01	3.662	1.80E-01	5.768	1.97E-01	4.603	1.83E-01	6.583	1.90E-01	2.757	2.31E-01	5.181	2.58E-01	*NA*	*NA*	*NA*	*NA*
	25	7.121	1.69E-01	9.29	1.87E-01	5.912	1.98E-01	8.264	2.10E-01	4.2	2.19E-01	6.925	2.42E-01	5.404	2.24E-01	7.97	2.36E-01	3.108	2.81E-01	6.224	3.21E-01	*NA*	*NA*	*NA*	*NA*
0.4	2	1.337	2.75E-02	1.402	2.82E-02	1.067	2.64E-02	1.159	2.58E-02	0.907	2.85E-02	1.034	2.86E-02	0.956	3.03E-02	1.075	2.94E-02	0.745	3.55E-02	0.915	3.64E-02	0.773	3.36E-02	0.95	3.19E-02
	3.5	1.828	3.61E-02	1.998	3.67E-02	1.483	3.75E-02	1.693	3.66E-02	1.22	4.19E-02	1.49	4.19E-02	1.334	4.41E-02	1.585	4.24E-02	0.982	5.39E-02	1.324	5.48E-02	1.086	5.22E-02	1.431	4.47E-02
	5	2.29	4.48E-02	2.572	4.51E-02	1.885	4.82E-02	2.216	4.71E-02	1.52	5.52E-02	1.939	5.45E-02	1.7	5.69E-02	2.087	5.44E-02	1.212	7.22E-02	1.732	7.24E-02	1.365	6.51E-02	1.868	5.52E-02
	10	3.591	7.43E-02	4.315	7.47E-02	2.97	8.53E-02	3.774	8.59E-02	2.294	9.86E-02	3.257	1.01E-01	2.701	9.92E-02	3.6	9.70E-02	1.783	1.26E-01	2.919	1.33E-01	2.102	1.14E-01	3.218	9.83E-02
	15	4.805	1.03E-01	6.007	1.04E-01	3.993	1.21E-01	5.298	1.23E-01	3.013	1.38E-01	4.542	1.45E-01	3.636	1.40E-01	5.076	1.39E-01	2.317	1.76E-01	4.079	1.91E-01	2.787	1.56E-01	4.545	1.35E-01
	20	5.913	1.30E-01	7.631	1.31E-01	4.913	1.57E-01	6.76	1.61E-01	3.606	1.82E-01	5.758	1.89E-01	4.459	1.88E-01	6.482	1.88E-01	2.711	2.34E-01	5.183	2.51E-01	*NA*	*NA*	*NA*	*NA*
	25	6.979	1.57E-01	9.228	1.62E-01	5.791	1.94E-01	8.189	1.98E-01	4.174	2.23E-01	6.947	2.32E-01	5.163	2.42E-01	7.959	2.30E-01	3.104	2.84E-01	6.263	3.10E-01	*NA*	*NA*	*NA*	*NA*
0.5	2	1.244	2.54E-02	1.319	2.60E-02	0.996	2.57E-02	1.097	2.46E-02	0.845	2.79E-02	0.981	2.74E-02	0.889	3.00E-02	1.017	2.89E-02	0.692	3.46E-02	0.872	3.49E-02	0.718	3.54E-02	0.902	3.09E-02
	3.5	1.727	3.48E-02	1.908	3.47E-02	1.401	3.70E-02	1.617	3.55E-02	1.164	4.11E-02	1.437	4.04E-02	1.263	4.43E-02	1.52	4.22E-02	0.943	5.25E-02	1.286	5.28E-02	1.014	5.42E-02	1.358	4.51E-02
	5	2.17	4.43E-02	2.473	4.36E-02	1.769	4.94E-02	2.117	4.69E-02	1.438	5.55E-02	1.868	5.39E-02	1.598	5.89E-02	2.001	5.56E-02	1.149	7.13E-02	1.674	7.16E-02	2.037	1.20E-01	3.171	1.00E-01
	10	3.531	7.41E-02	4.285	7.28E-02	2.901	8.62E-02	3.727	8.45E-02	2.272	9.95E-02	3.25	9.92E-02	2.631	1.04E-01	3.551	9.90E-02	1.783	1.29E-01	2.932	1.32E-01	1.265	7.10E-02	1.776	6.08E-02
	15	4.728	1.02E-01	5.974	9.98E-02	3.887	1.24E-01	5.228	1.21E-01	2.962	1.43E-01	4.532	1.43E-01	3.529	1.48E-01	5.004	1.40E-01	2.271	1.84E-01	4.088	1.90E-01	2.676	1.73E-01	4.454	1.48E-01
	20	5.85	1.28E-01	7.62	1.29E-01	4.821	1.60E-01	6.7	1.58E-01	3.593	1.85E-01	5.775	1.87E-01	4.372	1.90E-01	6.425	1.79E-01	2.716	2.37E-01	5.214	2.49E-01	*NA*	*NA*	*NA*	*NA*
	25	6.928	1.54E-01	9.256	1.60E-01	5.717	1.94E-01	8.147	1.94E-01	4.192	2.24E-01	6.991	2.28E-01	5.175	2.31E-01	7.818	2.21E-01	3.129	2.87E-01	6.314	3.06E-01	*NA*	*NA*	*NA*	*NA*
0.7	2	1.107	2.32E-02	1.197	2.34E-02	0.89	2.47E-02	1.002	2.36E-02	0.753	2.69E-02	0.899	2.62E-02	0.798	2.79E-02	0.935	2.75E-02	0.617	3.29E-02	0.805	3.33E-02	0.643	3.81E-02	0.836	3.20E-02
	3.5	1.585	3.31E-02	1.792	3.28E-02	1.285	3.72E-02	1.521	3.48E-02	1.064	4.13E-02	1.358	3.99E-02	1.152	4.29E-02	1.429	4.12E-02	0.857	5.19E-02	1.219	5.22E-02	0.918	5.69E-02	1.275	4.75E-02
	5	2.03	4.28E-02	2.365	4.19E-02	1.653	5.00E-02	2.023	4.55E-02	1.343	5.58E-02	1.796	5.31E-02	1.483	5.79E-02	1.909	5.43E-02	1.07	7.10E-02	1.615	7.06E-02	1.159	7.71E-02	1.695	6.37E-02
	10	3.531	7.41E-02	4.285	7.28E-02	2.76	8.91E-02	3.62	8.03E-02	2.162	1.02E-01	3.178	9.66E-02	2.481	1.05E-01	3.438	9.60E-02	1.689	1.29E-01	2.874	1.30E-01	1.909	1.33E-01	3.074	1.08E-01
	15	4.584	1.04E-01	5.915	1.01E-01	3.735	1.25E-01	5.125	1.14E-01	2.859	1.46E-01	4.477	1.38E-01	3.355	1.50E-01	4.881	1.34E-01	2.187	1.85E-01	4.045	1.88E-01	2.535	1.90E-01	4.347	1.58E-01
	20	5.711	1.31E-01	7.66	1.33E-01	4.65	1.60E-01	6.608	1.56E-01	3.501	1.88E-01	5.738	1.80E-01	4.17	1.93E-01	6.292	1.77E-01	2.631	2.39E-01	5.176	2.45E-01	*NA*	*NA*	*NA*	*NA*
	25	6.769	1.57E-01	9.28	1.49E-01	5.503	1.96E-01	8.063	1.92E-01	4.076	2.32E-01	6.957	2.26E-01	4.931	2.35E-01	7.679	2.23E-11	3.017	2.93E-01	6.27	3.02E-01	*NA*	*NA*	*NA*	*NA*
1	2	0.988	2.22E-02	1.095	2.24E-02	0.797	2.36E-02	0.921	2.30E-02	0.674	2.62E-02	0.832	2.53E-02	0.709	2.71E-02	0.857	2.67E-02	0.541	3.27E-02	0.739	3.26E-02	0.566	3.85E-02	0.762	3.34E-02
	3.5	1.456	3.21E-02	1.688	3.24E-02	1.184	3.56E-02	1.438	3.44E-02	0.977	4.01E-02	1.289	3.89E-02	1.052	4.10E-02	1.345	4.05E-02	0.774	5.14E-02	1.149	5.52E-02	0.824	6.00E-02	1.198	5.10E-02
	5	1.885	4.19E-02	2.255	4.20E-02	1.536	4.82E-02	1.932	4.52E-02	1.248	5.43E-02	1.726	5.18E-02	1.363	5.50E-02	1.812	5.38E-02	0.976	7.00E-02	1.539	6.98E-02	1.055	8.18E-02	1.612	6.79E-02
	10	3.183	7.41E-02	4.058	7.29E-02	2.592	8.91E-02	3.497	7.90E-02	2.031	1.01E-01	3.091	9.44E-02	2.295	1.03E-01	3.296	9.43E-02	1.542	1.31E-01	2.761	1.30E-01	1.726	1.50E-01	2.915	1.25E-01
	15	4.375	1.06E-01	5.813	9.99E-02	3.545	1.28E-01	5.004	1.13E-01	2.717	1.46E-01	4.392	1.35E-01	3.131	1.50E-01	4.717	1.35E-01	2.025	1.88E-01	3.923	1.86E-01	2.328	2.10E-01	4.196	1.73E-01
	20	5.493	1.38E-01	7.528	1.20E-01	4.433	1.65E-01	6.526	1.48E-01	3.334	1.88E-01	5.661	1.82E-01	3.901	1.94E-01	6.132	1.81E-01	2.451	2.42E-01	5.048	2.43E-01	*NA*	*NA*	*NA*	*NA*
	25	6.58	1.73E-01	9.165	1.43E-01	5.274	2.00E-01	8	1.66E-01	3.907	2.29E-01	6.929	2.30E-01	4.63	2.38E-01	7.55	2.12E-01	2.829	2.95E-01	6.149	3.10E-01	*NA*	*NA*	*NA*	*NA*

Supplementary Table 3. Data used to construct Figure 1: peak width ($w_{1/2}$), gradient steepness (b), relative peak width, peak capacity (n_c) and peak capacity per pressure and time unit (n_c / $P*t$). All data were obtained by injecting intact pembrolizumab.

		50 x 2.1 mm					20 x 2.1 mm					15 x 2.1 mm					10 x 2.1 mm					5 x 2.1 mm					5 x 2.1 mm				
Flow rate (mL/min)	gradient time (min)	w 1/2 (min)	b	rel. peak width	n_c	$n_c / P\,t$	w 1/2 (min)	b	rel. peak width	n_c	$n_c / P\,t$	w 1/2 (min)	b	rel. peak width	n_c	$n_c / P\,t$	w 1/2 (min)	b	rel. peak width	n_c	$n_c / P\,t$	w 1/2 (min)	b	rel. peak width	n_c	$n_c / P\,t$	w 1/2 (min)	b	rel. peak width	n_c	$n_c / P\,t$
0.3	2	0.031	3.48	0.04165	32	0.34	0.031	1.53	0.04321	36	0.79	0.032	1.17	0.04916	35	1.21	0.032	0.86	0.04534	36	2.06	0.034	0.50	0.05259	35	4.47	3.39E-02	0.31	0.05138	35	2.23
	3.5	0.042	1.99	0.03716	45	0.27	0.040	0.87	0.03759	50	0.62	0.045	0.67	0.04640	45	0.87	0.044	0.49	0.04051	47	1.53	0.049	0.29	0.05020	43	3.13	4.22E-02	0.18	0.04163	49	1.78
	5	0.052	1.39	0.03434	53	0.22	0.051	0.61	0.03561	56	0.49	0.061	0.47	0.04616	48	0.65	0.057	0.35	0.03866	52	1.19	0.065	0.20	0.04976	46	2.34	5.34E-02	0.12	0.03923	56	1.41
	10	0.089	0.70	0.03306	64	0.13	0.092	0.31	0.03526	64	0.28	0.115	0.23	0.04898	52	0.35	0.101	0.17	0.03814	59	0.67	0.120	0.10	0.05151	50	1.28	1.00E-01	0.06	0.04135	59	0.75
	15	0.127	0.46	0.03273	69	0.09	0.137	0.20	0.03678	65	0.19	0.167	0.16	0.04945	53	0.24	0.147	0.12	0.03840	61	0.47	0.173	0.07	0.05142	52	0.88	1.26E-01	0.04	0.03551	71	0.60
	20	0.166	0.35	0.03302	70	0.07	0.182	0.15	0.03774	65	0.14	0.222	0.12	0.05086	54	0.18	0.194	0.09	0.03915	61	0.35	0.229	0.05	0.05254	52	0.67	*NA*				
	25	0.211	0.28	0.03413	70	0.06	0.228	0.12	0.03851	65	0.11	0.276	0.09	0.05164	54	0.15	0.245	0.07	0.04025	61	0.28	0.285	0.04	0.05307	53	0.54					
0.4	2	0.028	2.65	0.04042	37	0.26	0.027	1.18	0.04112	41	0.72	0.030	0.90	0.04921	38	0.89	0.029	0.68	0.04395	40	1.42	0.031	0.40	0.05158	38	2.52	3.13E-02	0.28	0.05118	38	3.07
	3.5	0.039	1.51	0.03549	49	0.20	0.038	0.68	0.03669	53	0.53	0.044	0.52	0.04631	46	0.62	0.042	0.39	0.03948	50	1.01	0.047	0.23	0.04940	44	1.69	4.09E-02	0.16	0.04204	51	2.34
	5	0.049	1.06	0.03269	58	0.16	0.048	0.47	0.03441	60	0.42	0.058	0.36	0.04455	51	0.48	0.053	0.27	0.03708	56	0.80	0.061	0.16	0.04730	49	1.31	5.12E-02	0.11	0.03891	58	1.87
	10	0.085	0.53	0.03125	68	0.10	0.088	0.24	0.03441	67	0.23	0.110	0.18	0.04663	54	0.26	0.096	0.14	0.03669	62	0.44	0.114	0.08	0.04871	53	0.70	9.55E-02	0.06	0.03991	62	1.01
	15	0.120	0.35	0.03051	73	0.07	0.128	0.16	0.03445	69	0.16	0.159	0.12	0.04686	56	0.18	0.138	0.09	0.03624	65	0.31	0.166	0.05	0.04911	54	0.48	1.31E-01	0.04	0.03760	68	0.73
	20	0.166	0.27	0.03230	71	0.05	0.174	0.12	0.03582	68	0.12	0.211	0.09	0.04770	57	0.13	0.190	0.07	0.03834	63	0.22	0.218	0.04	0.04928	55	0.37	*NA*				
	25	0.220	0.21	0.03426	67	0.04	0.232	0.09	0.03874	64	0.09	0.272	0.07	0.04999	55	0.10	0.253	0.05	0.04095	59	0.17	0.283	0.03	0.05197	53	0.28					
0.5	2	0.027	2.15	0.04015	40	0.26	0.025	0.99	0.03952	45	0.84	0.029	0.77	0.04756	40	0.78	0.027	0.57	0.04189	43	1.24	0.030	0.34	0.05024	40	2.95	2.91E-02	0.26	0.04905	41	5.11
	3.5	0.035	1.23	0.03189	56	0.20	0.036	0.56	0.03547	57	0.60	0.042	0.44	0.04467	49	0.54	0.039	0.32	0.03814	53	0.87	0.044	0.19	0.04733	47	2.00	4.43E-02	0.15	0.04763	47	3.37
	5	0.045	0.86	0.03004	63	0.16	0.047	0.39	0.03411	62	0.46	0.057	0.31	0.04423	52	0.40	0.052	0.23	0.03693	57	0.66	0.060	0.14	0.04680	50	1.49	6.02E-02	0.10	0.04772	50	2.48
	10	0.075	0.43	0.02693	77	0.10	0.083	0.20	0.03251	71	0.26	0.105	0.15	0.04421	56	0.22	0.092	0.11	0.03488	65	0.38	0.110	0.07	0.04616	54	0.81	8.80E-02	0.05	0.03646	68	1.69
	15	0.119	0.29	0.02935	74	0.06	0.124	0.13	0.03344	72	0.18	0.153	0.10	0.04471	58	0.15	0.136	0.08	0.03570	66	0.25	0.160	0.05	0.04663	56	0.56	1.45E-01	0.03	0.04202	62	1.03
	20	0.160	0.22	0.02982	74	0.05	0.179	0.10	0.03662	66	0.12	0.216	0.08	0.04824	55	0.11	0.196	0.06	0.03893	61	0.18	0.226	0.03	0.05040	53	0.39	*NA*				
	25	0.183	0.17	0.02802	81	0.04	0.208	0.08	0.03451	71	0.11	0.271	0.06	0.04886	55	0.09	0.222	0.05	0.03570	67	0.16	0.283	0.03	0.05100	53	0.32					
0.7	2	0.023	1.58	0.03462	47	0.16	0.024	0.74	0.03858	49	0.46	0.026	0.59	0.04537	45	0.63	0.025	0.46	0.04105	47	0.69	0.027	0.29	0.04776	44	1.00	2.85E-02	0.23	0.05118	42	1.55
	3.5	0.033	0.90	0.03006	61	0.11	0.034	0.42	0.03474	60	0.32	0.040	0.34	0.04289	52	0.42	0.037	0.26	0.03745	56	0.47	0.042	0.16	0.04555	50	0.65	4.45E-02	0.13	0.04962	47	0.99
	5	0.041	0.63	0.02772	70	0.09	0.045	0.30	0.03301	66	0.25	0.053	0.24	0.04187	56	0.31	0.049	0.18	0.03570	61	0.36	0.056	0.11	0.04461	53	0.49	6.04E-02	0.09	0.04918	49	0.73
	10	0.072	0.32	0.02543	82	0.05	0.078	0.15	0.03069	76	0.14	0.097	0.12	0.04113	61	0.17	0.086	0.09	0.03336	69	0.20	0.104	0.06	0.04361	58	0.26	9.20E-02	0.05	0.03889	65	0.48
	15	0.100	0.21	0.02392	89	0.04	0.120	0.10	0.03207	74	0.09	0.155	0.08	0.04483	58	0.11	0.133	0.06	0.03466	67	0.13	0.166	0.04	0.04784	54	0.17	1.52E-01	0.03	0.04446	59	0.29
	20	0.119	0.16	0.02198	99	0.03	0.137	0.07	0.02783	86	0.08	0.200	0.06	0.04356	60	0.08	0.148	0.05	0.02936	80	0.12	0.217	0.03	0.04710	55	0.13	*NA*				
	25	0.153	0.13	0.02312	96	0.03	0.169	0.06	0.02811	88	0.07	0.229	0.05	0.04074	65	0.07	0.186	0.04	0.03022	80	0.09	0.246	0.02	0.04370	61	0.11					
1	2	0.023	1.14	0.03524	49	0.11	0.023	0.56	0.03916	51	0.30	0.025	0.45	0.04467	48	0.33	0.024	0.37	0.04164	49	0.53	0.026	0.22	0.04950	45	0.91	3.07E-02	0.20	0.05894	39	3.97
	3.5	0.033	0.65	0.03107	61	0.08	0.033	0.32	0.03500	62	0.21	0.037	0.25	0.04120	56	0.22	0.036	0.21	0.03774	57	0.36	0.041	0.12	0.04664	51	0.59	4.54E-02	0.11	0.05273	46	2.68
	5	0.043	0.46	0.02916	68	0.06	0.044	0.22	0.03323	67	0.16	0.050	0.18	0.03986	60	0.17	0.047	0.15	0.03591	62	0.27	0.055	0.09	0.04557	54	0.44	5.78E-02	0.08	0.04798	52	2.11
	10	0.075	0.23	0.02658	79	0.03	0.079	0.11	0.03118	75	0.09	0.095	0.09	0.04003	63	0.09	0.087	0.07	0.03415	69	0.15	0.105	0.04	0.04581	57	0.23	1.19E-01	0.04	0.05236	50	1.03
	15	0.103	0.15	0.02511	86	0.02	0.103	0.07	0.02802	86	0.07	0.131	0.06	0.03785	68	0.06	0.113	0.05	0.03043	79	0.11	0.150	0.03	0.04447	60	0.16	1.59E-01	0.03	0.04731	56	0.77
	20	0.132	0.11	0.02461	90	0.02	0.130	0.06	0.02703	91	0.05	0.162	0.04	0.03573	73	0.05	0.144	0.04	0.02950	83	0.09	0.181	0.02	0.04055	66	0.13	*NA*				
	25	0.162	0.09	0.02435	91	0.02	0.160	0.04	0.02693	93	0.04	0.204	0.04	0.03652	73	0.04	0.176	0.03	0.02930	84	0.07	0.224	0.02	0.04083	67	0.11					

Supplementary Table 4. Data obtained during the loadability study. Sample: light-chain fragment of pembrolizumab.

		mass load	volumetric load	mass load	volumetric load	mass load	volumetric load	volumetric load
Column	column volume (uL)	injected mass (µg)		injected mass / column volume (ug/uL)		w50%		inj. / column volume
50 x 2.1 mm	105.7	1.000E+00	5.000E+00	9.461E-03	4.730E-02	1.870E-02	4.193E-02	9.461E-04
		1.000E-01	2.000E+00	9.461E-04	1.892E-02	1.850E-02	4.133E-02	1.892E-03
		5.000E-02	1.000E+00	4.730E-04	9.461E-03	1.844E-02	4.173E-02	4.730E-03
		2.500E-02	5.000E-01	2.365E-04	4.730E-03	1.855E-02	4.279E-02	9.461E-03
		1.250E-02	2.000E-01	1.183E-04	1.892E-03	1.851E-02	4.531E-02	1.892E-02
		6.250E-03	1.000E-01	5.913E-05	9.461E-04	1.826E-02	5.367E-02	4.730E-02
20 x 2.1 mm	42.3	1.000E+00	5.000E+00	2.364E-02	1.182E-01	1.993E-02	4.656E-02	2.364E-03
		1.000E-01	2.000E+00	2.364E-03	4.728E-02	1.950E-02	4.391E-02	4.728E-03
		5.000E-02	1.000E+00	1.182E-03	2.364E-02	1.948E-02	4.451E-02	1.182E-02
		2.500E-02	5.000E-01	5.910E-04	1.182E-02	1.936E-02	4.650E-02	2.364E-02
		1.250E-02	2.000E-01	2.955E-04	4.728E-03	1.932E-02	5.117E-02	4.728E-02
		6.250E-03	1.000E-01	1.478E-04	2.364E-03	1.993E-02	6.491E-02	1.182E-01
15 x 2.1 mm	31.7	1.000E+00	5.000E+00	3.155E-02	1.577E-01	2.140E-02	4.771E-02	3.155E-03
		1.000E-01	2.000E+00	3.155E-03	6.309E-02	2.050E-02	4.711E-02	6.309E-03
		5.000E-02	1.000E+00	1.577E-03	3.155E-02	2.058E-02	4.860E-02	1.577E-02
		2.500E-02	5.000E-01	7.886E-04	1.577E-02	2.031E-02	5.181E-02	3.155E-02
		1.250E-02	2.000E-01	3.943E-04	6.309E-03	1.996E-02	5.874E-02	6.309E-02
		6.250E-03	1.000E-01	1.972E-04	3.155E-03	1.982E-02	7.637E-02	1.577E-01
10 x 2.1 mm	21.1	1.000E+00	5.000E+00	4.739E-02	2.370E-01	2.196E-02	4.904E-02	4.739E-03
		1.000E-01	2.000E+00	4.739E-03	9.479E-02	2.131E-02	4.880E-02	9.479E-03
		5.000E-02	1.000E+00	2.370E-03	4.739E-02	2.109E-02	5.041E-02	2.370E-02
		2.500E-02	5.000E-01	1.185E-03	2.370E-02	2.076E-02	5.420E-02	4.739E-02
		1.250E-02	2.000E-01	5.924E-04	9.479E-03	2.032E-02	6.242E-02	9.479E-02
		6.250E-03	1.000E-01	2.962E-04	4.739E-03	2.082E-02	8.447E-02	2.370E-01
5 x 2.1 mm	10.6	1.000E+00	5.000E+00	9.434E-02	4.717E-01	2.555E-02	5.235E-02	9.434E-03
		1.000E-01	2.000E+00	9.434E-03	1.887E-01	2.378E-02	5.230E-02	1.887E-02
		5.000E-02	1.000E+00	4.717E-03	9.434E-02	2.365E-02	5.610E-02	4.717E-02
		2.500E-02	5.000E-01	2.358E-03	4.717E-02	2.332E-02	6.380E-02	9.434E-02
		1.250E-02	2.000E-01	1.179E-03	1.887E-02	2.335E-02	7.849E-02	1.887E-01
		6.250E-03	1.000E-01	5.896E-04	9.434E-03	2.271E-02	1.142E-01	4.717E-01