Energy Optimization via Process Modification to Maximize Economic Feasibility of the Butane Gas Splitting Process

Yeongryeol Choi[1,2], Nahyeon An[3], Il Moon[1], Junghwan Kim[2,]*

[1] Department of Chemical and Biomolecular Engineering, Yonsei University, 50 Yonsei-ro, Seodaemun-gu, Seoul 03722, Republic of Korea

[2] Green Materials and Processes R&D Group, Korea Institute of Industrial Technology, 55 Jongga-ro, Jung-gu, Ulsan 44413, Republic of Korea

[3] School of Energy and Chemical Engineering, Ulsan National Institute of Science and Technology (UNIST), 50 UNIST-gil, Eonyang-eup, Ulju-gun, Ulsan 44919, Republic of Korea

(kjh31@kitech.re.kr)

Supporting Information

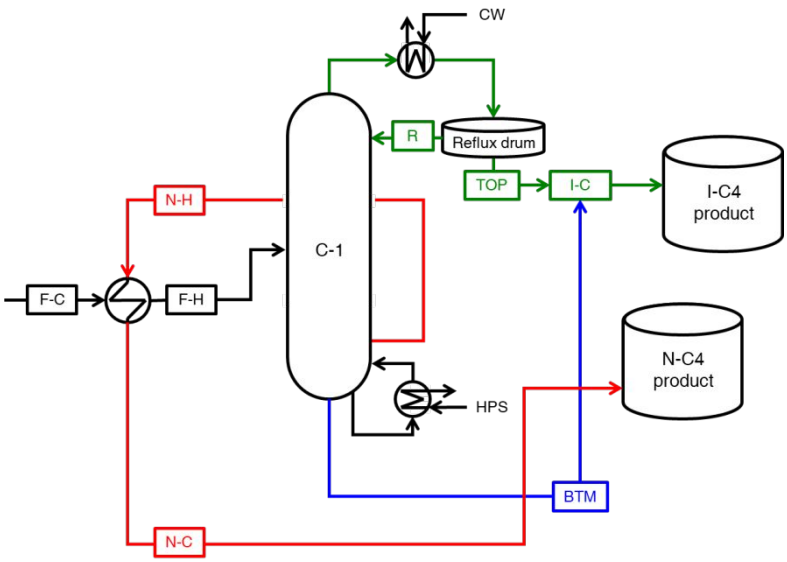

Figure S1. Process diagram for one column

Table S1. Column design conditions

Name	Unit	Case 1	Case 2	Case 3
Propane	wt.%	0.91	0.43	0.10
i-butane	wt.%	30.58	18.55	2.99
n-butane	wt.%	66.77	80.33	96.73
1-butene	wt.%	0.00	0.05	0.00
i-butene	wt.%	0.00	0.15	0.00
t-2-butene	wt.%	0.00	0.10	0.12
c-2-butene	wt.%	0.00	0.05	0.04
n-pentane	wt.%	0.37	0.17	0.02
i-pentane	wt.%	1.37	0.17	0.00
Water	wt.%	0.00	0.00	0.00
Mass flow	kg/h	4313.65	3613.45	3038.50
Feedstock temperature	℃	45.80	45.80	45.80
Feedstock pressure	kg/cm2g	7.70	7.70	7.70
Temperature of TOP	℃	57.00	61.00	58.00
Temperature of BTM	℃	95.00	85.00	74.00
Pressure of TOP	kg/cm2g	7.30	7.30	7.30
Pressure of BTM flow	kg/cm2g	7.90	7.90	7.90

Table S2. Validation results for case 1

Name	Unit	n-butane product flow (N-H)			i-butane product flow (TOP)			Bottom flow (BTM)		
		Design	Simulation	Difference	Design	Simulation	Difference	Design	Simulation	Difference
Propane	wt.%	0.00	0.00	0.00	2.98	2.98	0.00	0.00	0.00	0.00
i-Butane	wt.%	2.90	3.25	0.35	93.83	93.05	-0.78	0.00	0.02	0.02
n-Butane	wt.%	96.01	96.00	-0.01	3.19	3.97	0.78	26.48	9.42	-17.06
1-Butene	wt.%	0.00	0.00	0.00	0.00	0.00	0.00	0.00	0.00	0.00
i-Butene	wt.%	0.00	0.00	0.00	0.00	0.00	0.00	0.00	0.00	0.00
t-2-Butene	wt.%	0.00	0.00	0.00	0.00	0.00	0.00	0.00	0.00	0.00
c-2-Butene	wt.%	0.00	0.00	0.00	0.00	0.00	0.00	0.00	0.00	0.00
n-Pentane	wt.%	0.22	0.14	-0.08	0.00	0.00	0.00	16.62	20.51	3.89
i-Pentane	wt.%	0.87	0.61	-0.26	0.00	0.00	0.00	56.90	70.05	13.15
Water	wt.%	0.00	0.00	0.00	0.00	0.00	0.00	0.00	0.00	0.00
Mass flow	kg/h	2940.05	2940.05	0.00	1315.25	1315.25	0.00	58.35	58.35	0.00
Temperature	°C	73.00	73.00	0.00	51.00	51.00	0.00	95.00	95.00	0.00
Pressure	kg/cm^2	-	7.79	-	7.30	7.30	0.00	7.90	7.90	0.00

Table S3. Validation results for case 2

Name	Unit	n-butane product flow (N-H)			i-butane product flow (TOP)			Bottom flow(BTM)		
		Design	Simulation	Difference	Design	Simulation	Difference	Design	Simulation	Difference
Propane	wt.%	0.00	0.00	0.00	2.36	2.38	0.01	0.00	0.00	0.00
i-Butane	wt.%	2.04	2.25	0.20	93.32	92.39	-0.93	0.00	0.07	0.07
n-Butane	wt.%	97.34	97.34	0.00	4.32	4.60	0.28	64.69	55.93	-8.76
1-Butene	wt.%	0.06	0.03	-0.03	0.00	0.15	0.15	0.00	0.00	0.00
i-Butene	wt.%	0.18	0.08	-0.10	0.00	0.48	0.48	0.00	0.01	0.01
t-2-Butene	wt.%	0.13	0.12	0.00	0.00	0.01	0.01	0.00	0.08	0.08
c-2-Butene	wt.%	0.07	0.06	-0.01	0.00	0.00	0.00	0.00	0.08	0.08
n-Pentane	wt.%	0.09	0.06	-0.03	0.00	0.00	0.00	18.04	22.43	4.39
i-Pentane	wt.%	0.10	0.07	-0.03	0.00	0.00	0.00	17.27	21.41	4.14
Water	wt.%	0.00	0.00	0.00	0.00	0.00	0.00	0.00	0.00	0.00
Mass flow	kg/h	2940.00	2940.00	0.00	654.05	654.05	0.00	19.40	19.40	0.00
Temperature	°C	73.00	73.00	0.00	61.00	61.00	0.00	85.00	85.00	0.00
Pressure	kg/cm^2	-	7.79	-	7.30	7.30	0.00	7.90	7.90	0.00

Table S4. Validation results for case 3

Name	Unit	n-butane product flow (N-H)			i-butane product flow (TOP)			Bottom flow(BTM)		
		Design	Simulation	Difference	Design	Simulation	Difference	Design	Simulation	Difference
Propane	wt.%	0.00	0.00	0.00	3.37	3.41	0.04	0.00	0.00	0.00
i-butane	wt.%	0.57	0.58	0.00	83.10	82.96	-0.14	0.00	0.03	0.03
n-butane	wt.%	99.25	99.25	0.00	13.53	13.61	0.08	96.52	95.73	-0.79
1-butene	wt.%	0.00	0.00	0.00	0.00	0.00	0.00	0.00	0.00	0.00
i-butene	wt.%	0.00	0.00	0.00	0.00	0.00	0.00	0.00	0.00	0.00
t-2-butene	wt.%	0.12	0.12	0.00	0.00	0.02	0.02	0.21	0.12	-0.09
c-2-butene	wt.%	0.04	0.04	0.00	0.00	0.00	0.00	0.11	0.09	-0.02
n-pentane	wt.%	0.01	0.01	0.00	0.00	0.00	0.00	3.16	4.03	0.86
i-pentane	wt.%	0.00	0.00	0.00	0.00	0.00	0.00	0.00	0.00	0.00
Water	wt.%	0.00	0.00	0.00	0.00	0.00	0.00	0.00	0.00	0.00
Mass flow	kg/h	2940.00	2940.00	0.00	89.05	89.02	-0.03	9.48	9.48	0.00
Temperature	°C	73.00	73.00	0.00	57.00	57.00	0.00	74.00	74.00	0.00
Pressure	kg/cm^2	-	7.79	-	7.30	7.30	0.00	7.90	7.90	0.00